GENERAL INFORMATION

37100010025

Engine speed-responsive hydraulic power steering or manual steering has been used.
The main features are as follows. The steering wheel has four spokes. In addition, SRS (Supplemental Restraint System) is available as an option in all vehicles.

The steering column in all vehicles has a shock absorber mechanism and a tilt steering mechanism.

SERVICE SPECIFICATIONS

37100030021

Items			Standard value	Limit
Steering wheel free play mm		With engine running	–	50
		With engine stopped	10 or less	–
Steering angle	2WD	Inner wheel	33°55’ – 36°55’	–
		Outer wheel	30°57’	–
	4WD	Inner wheel	29°40’ – 32°40’	–
		Outer wheel	29°30’	
Steering gear backlash mm			–	0.5
Variation of tie rod end ball joint shaft direction mm			–	1.5
Tie rod end ball joint starting torque Nm			3.0	–
Steering gear oil level mm			22	–
Engine idle speed r/min		4G6	750 ± 100	–
		4D56	750 ± 100	–
Stationary steering effort N			39.2 or less	–
Oil pump pressure MPa	Oil pump relief pressure		8.3 – 9.0	–
	Pressure under no-load conditions		0.8 – 1.0	–
	Steering gear retention hydraulic pressure		8.3 – 9.0	–
Oil pressure switch operating pressure MPa		OFF ON	1.5 – 2.0	–
		ON OFF	0.7 – 1.2	–
Mainshaft starting torque Nm			0.49 – 0.78	–
Cross-shaft axial play mm			0.05 or less	–
Mainshaft total starting torque Nm		<2WD>	0.98 – 1.47	–
		<4WD>	0.69 – 1.28	–
Pitman arm ball joint starting torque Nm			0.5 – 1.5	–
Mainshaft axial play mm			0.03 or less	–
Backlash between ball groove of rack piston and balls mm			–	0.05
Idler arm sliding resistance N		2WD	8.8 – 30	–
		4WD	2.4 – 16	–

LUBRICANTS

37100040017

Items	Specified lubricants	Quantity
Manual steering gear oil	Hypoid gear oil API GL-4 or higher SAE80	0.21
Power steering fluid	Automatic transmission fluid DEXRON or DEXRON II	0.8
Seal ring, rack piston, mainshaft, cross-shaft, bearing, O-ring, oil seal, vane	Automatic transmission fluid DEXRON or DEXRON II	As required

SEALANTS

37100050010

Items	Specified sealants	Remarks
Cover assembly installation hole Adjusting bolt, seal bolt, packing, adjusting shim, dust cover lip for ball joint	3M ATD Part No.8663 or equivalent	Semi-drying sealant

SPECIAL TOOLS

37100060013

Tool	Number	Name	Use
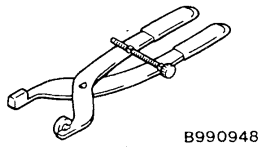	MB990948	Linkage joint gauge	Ball joint variation check for shaft direction
	MB991113 or MB990635	Steering linkage puller	Disconnection of ball joint
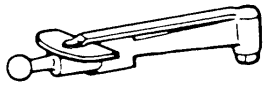	MB990685 MB991151	Torque wrench	Measurement of the ball joint starting torque Measurement of the pinion shaft preload Measurement of the mainshaft starting torgue
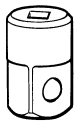	MB990326	Preload socket	Measurement of the ball joint starting torque
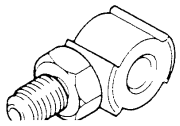	MB990993 or MB991217	Power steering oil pressure gauge adapter (pump side)	Measurement of oil pressure

Tool	Number	Name	Use
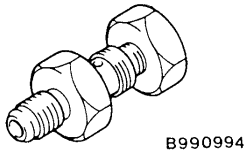	MB990994	Power steering oil pressure gauge adapter (hose side)	Measurement of oil pressure
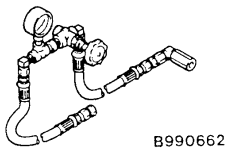	MB990662	Oil pressure gauge assembly	
	MB990803	Steering wheel puller	Disconnection of the steering wheel
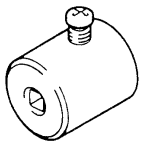	MB991006 or MB990228	Preload socket	Measurement of the mainshaft total starting torque
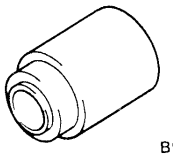	MB990776	Front axle base	Installation of dust cover for tie rod end ball joint
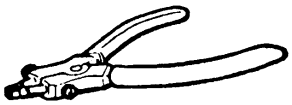	MB990628	Snap ring pliers	To remove and install the snap ring of the pulley assembly
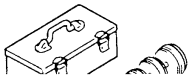	MB990925	Bearing and oil seal installer set	Installation of the oil seal and bearing (Refer to GROUP 26 – Special Tools.)
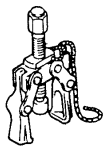	MB990915	Pitman arm puller	Removal of the pitman arm
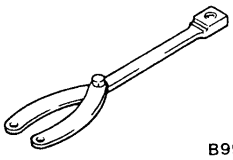	MB991367	Special spanner	Removal and installation of the lock nut

Tool	Number	Name	Use
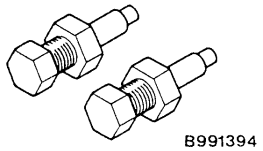	MB991394	Pin set	Removal and installation of the lock nut
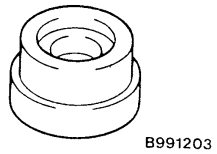	MB991203	Oil seal & bearing installer	To press in the valve housing oil seal and bearing
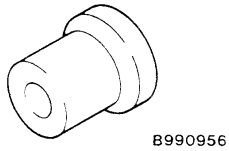	MB990956	Needle bearing installer	To press in the drive shaft assembly
	MB991172	Adapter	
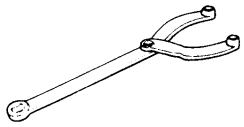	MB990767	End york holder	Securing the drive pulley
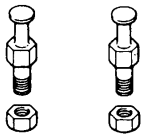	MD998719 or MD998754	Crankshaft pulley holder pin	

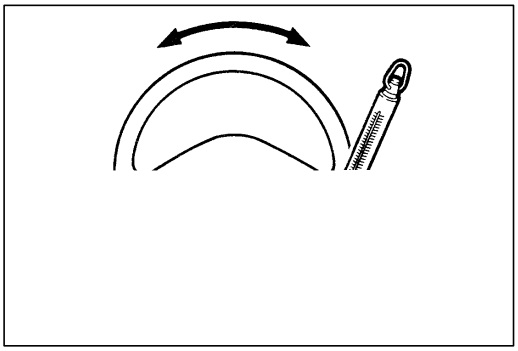

ON-VEHICLE SERVICE

37100090036

STEERING WHEEL FREE PLAY CHECK

<Manual steering>

1. Set the front wheels straight ahead.
2. Measure the play on the steering wheel circumference before wheels move when slightly moving the steering wheel in both directions.

   Limit: 50 mm

3. When the play exceeds the limit, check the play in the steering shaft connection and steering linkage. Correct or replace.
4. When (3) check provides good results, check the following to adjust:

   Remove the steering gear box, check and adjust the mainshaft total starting torque.

<Power steering>

1. With engine running (hydraulic operation), set front wheels straight ahead.
2. Measure the play on steering wheel circumference before wheels start to move when slightly moving steering wheel in both directions.

   Limit: 50 mm

3. When play exceeds the limit, check for play on steering shaft connection and steering linkage. Correct or replace.
4. If the free play still exceeds the limit value, set steering wheel straight ahead with engine stopped. Load 5 N towards steering wheel circumference and check play.

   Standard value (steering wheel play with engine stopped): 10 mm or less

   If the play exceeds the standard value, check the steering gear backlash and ball joint axial play.

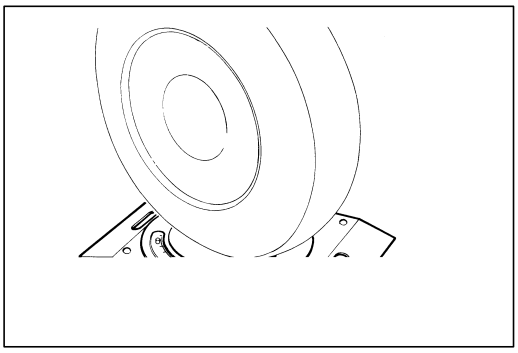

STEERING ANGLE CHECK

37100100012

1. Place the front wheel on a turning radius gauge and measure the steering angle.

   Standard value:

Items	2WD	4WD
Inside wheel	33 55’ – 36 55’	29 40’ – 32 40’
Outside wheel	30 57’	29 30’

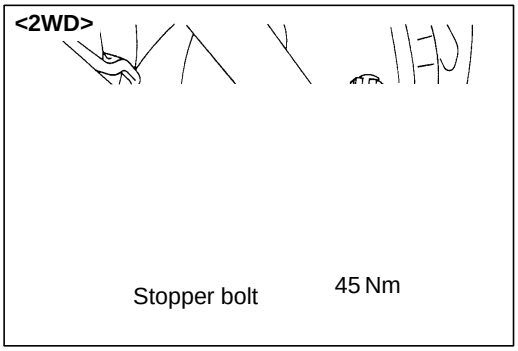

2. If the steering angle is outside the standard value after checking the toe-in (refer to GROUP 33A – On-vehicle Service), adjust the steering angle with the stopper bolt.

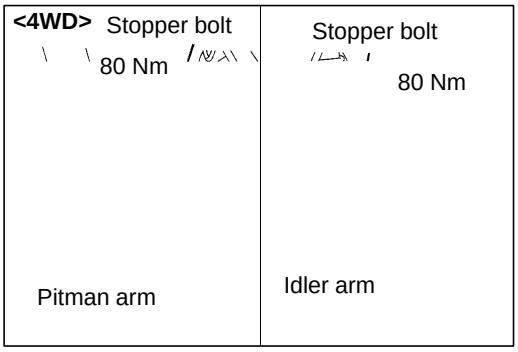

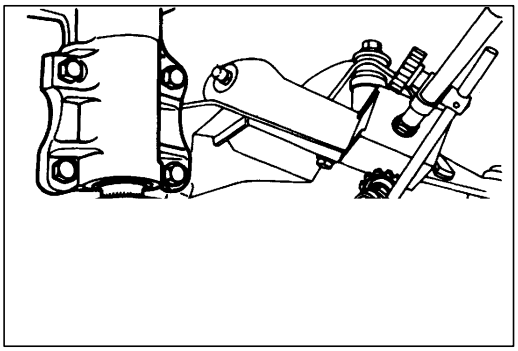

STEERING GEAR BACKLASH CHECK 37100120018

1. Jack up the vehicle front and hold the steering wheel in the straight ahead position.
2. Apart the pitman arm and the relay rod. (Refer to P.37A-49.)
3. Measure the steering gear backlash at the pitman arm top end with a dial indicator.

   Limit: 0.5 mm

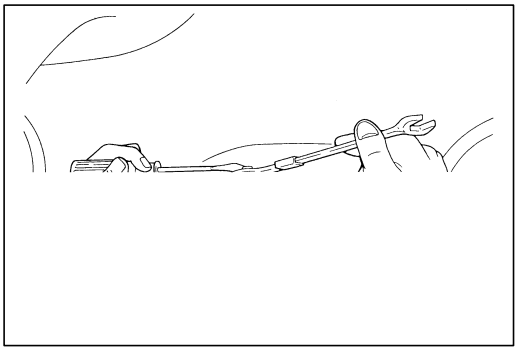

4. If the measured value exceeds the limit, screw in the steering gear box adjusting bolt until steering wheel free play is within the standard value.

   Caution
   1. **Be sure to make the adjustment with the steering wheel in the straight ahead position.**
   2. **If the adjusting bolt is overtightened, more steering effort will be required, and return of the wheel will be adversely affected.**

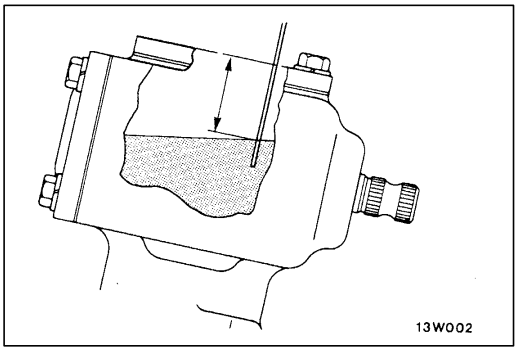

STEERING GEAR OIL LEVEL CHECK (MANUAL STEERING) 37100110015

Remove the breather plug and check the oil level in the steering gear box by using a special gauge or a thin screwdriver.

Standard value: 22 mm

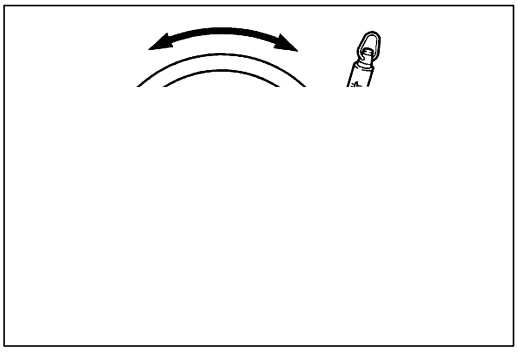

STATIONARY STEERING EFFORT CHECK (POWER STEERING) 37200170115

1. With the vehicle stopped on a flat and paved surface, and turn the steering wheel to the straight ahead position.
2. Start the engine and check the engine idle speed.

   Standard value:

Engine idle speed r/min	Remarks
750 ± 100	4G6
750 ± 100	4D56

3. Attach a spring balance to the outer circumference of the steering wheel and measure the steering force required to turn the steering wheel from the straight ahead position to the left and right (within a range of 1.5 turns). Also check to be sure that there is no significant fluctuation of the required steering force.

   Standard value:
   Steering effort: 39.2 N or less
   Fluctuation allowance: 5 N or less

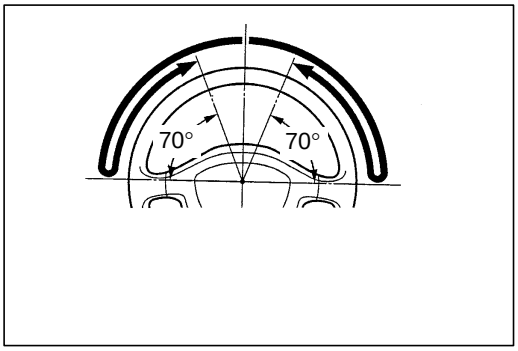

CHECKING STEERING WHEEL RETURN TO CENTRE (POWER STEERING) 37200180118

Conduct a road test before this test.

1. Make both gradual and sudden turns and check the steering “feeling” to be sure that there is no difference in the steering force required and the wheel return between left and right turns.
2. At a speed of 35 km/h, turn the steering wheel 90° and release the steering wheel after 1 or 2 seconds. If the steering wheel then returns 70° or more, the return can be judged to the satisfactory.

   NOTE
   There will be a momentary feeling or “heaviness” when the wheel is turned quickly, but this is not abnormal. (this is because the oil pump discharge amount is especially apt to be insufficient during idling.)

DRIVE BELT TENSION CHECK (POWER STEERING)

37200190074

Refer to GROUP 11A and B – On-vehicle Service.

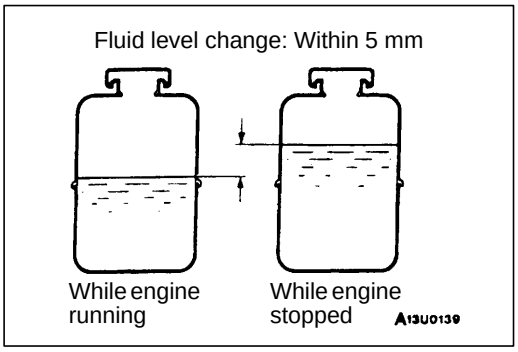

FLUID LEVEL CHECK (POWER STEERING)

37200200098

1. Park the vehicle on a flat, level surface, start the engine, and then turn the steering wheel several times to raise the temperature of the fluid to approximately 50–60°C.
2. With the engine running, turn the wheel all the way to the left and right several times.
3. Check the fluid in the oil reservoir for foaming or milkiness. Check the difference of the fluid level when the engine is stopped, and while it is running. If the change of the fluid level is 5 mm or more, air bleeding should be done.

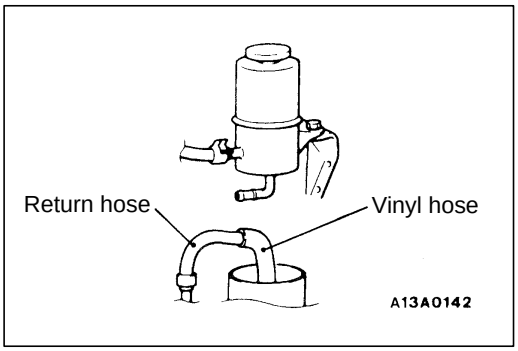

FLUID REPLACEMENT (POWER STEERING)

37200210091

1. Raise the front wheels on a jack, and then support them with rigid racks.
2. Disconnect the return hose connection.
3. Connect a vinyl hose to the return hose, and drain the oil into a container.
4. On vehicles with a petrol engine, disconnect the high-tension cable. On vehicles with a diesel engine, remove the fuel cut valve connector attached to the injection pump.

   Caution
   Be careful not to position the high-tension cable near the delivery pipe.

5. While operating the starting motor intermittently, turn the steering wheel all the way to the left and right several times to drain all of the fluid.
6. Connect the return hoses securely, and then secure it with the clip.
7. Fill the oil reservoir with the specified fluid up to the lower position of the filter, and then bleed the air.

   Specified fluid:
   Automatic transmission fluid
   DEXRON or DEXRON II

BLEEDING (POWER STEERING) 37200220100

1. Jack up the front wheels and support them by using a rigid rack.
2. Manually turn the oil pump pulley a few times.
3. Turn the steering wheel all the way to the left and to the right five or six times.
4. On vehicles with a petrol engine, disconnect the high-tension cable. On vehicles with a diesel engine, remove the fuel cut valve connector attached to the injection pump.

   Caution
   Be careful not to place the high-tension cable near the delivery pipe.

5. While operating the starting motor intermittently, turn the steering wheel all the way to the left and right five or six times (for 15 to 20 seconds).

   Caution
   1. **During air bleeding, refill the fluid so that the level never falls below the lower position of the filter.**
   2. **If air bleeding is done while engine is running, the air will be broken up and absorbed into the fluid; be sure to do the bleeding only while cranking.**

6. On vehicles with a petrol engine, connect the high-tention cable. On vehicles with a diesel engine, connect the fuel cut valve connector attached to the injection pump. Start cranking.

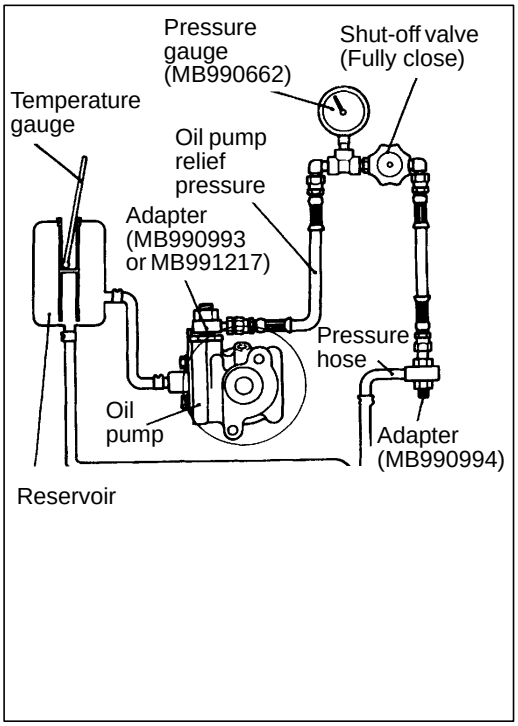

OIL PUMP PRESSURE TEST (POWER STEERING)

37200230127

1. Disconnect the pressure hose from the oil pump, and then connect the special tools.
2. Bleed the air, and then turn the steering wheel several times while the vehicle is not moving so that the temperature of the fluid rises to approximately 50–60°C.
3. Start the engine and idle it at 1,000±100 r/min.
4. Fully close the shut-off valve of the pressure gauge and measure the oil pump relief pressure to confirm that it is within the standard value range.

   Standard value: 8.3 – 9.0 MPa

   Caution
   Pressure gauge shut off valve must not remain closed for more than 10 seconds.

5. If it is not within the standard value, replace the oil pump.
6. Check whether or not the hydraulic pressure is the standard value when no-load conditions are created by fully opening the shut-off valve of the pressure gauge.

   Standard value: 0.8 – 1.0 Mpa

7. If it is not within the standard value, the probable cause is a malfunction of the oil line or steering gear box, so check these parts and repair as necessary.
8. Turn the steering wheel all the way to the left or right; then check whether or not the retention hydraulic pressure is the standard value.

   Standard value: 8.3 – 9.0 MPa

9. When not within the standard value, overhaul the steering gear box.
   Remeasure fluid pressure.
10. Remove the special tools, and then tighten the pressure hose to the specified torque.

    Tightening torque: 18 Nm

11. Bleed the system.

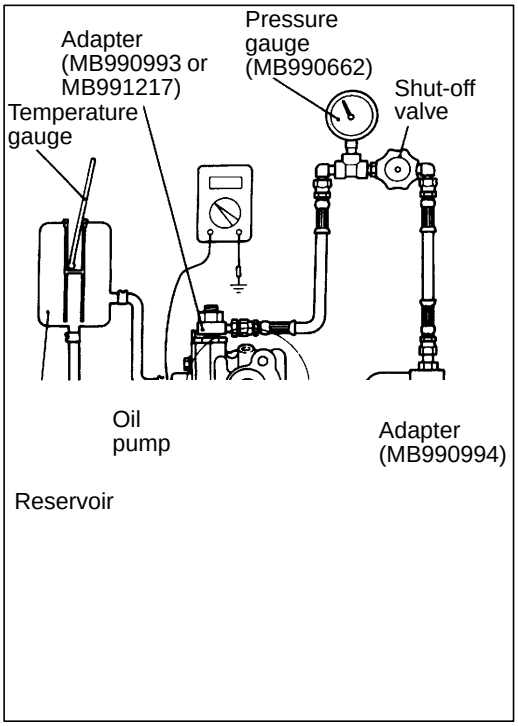

POWER STEERING OIL PRESSURE SWITCH CHECK (POWER STEERNG) <Petrol-powered vehicle>

37200720105

1. Disconnect the pressure hose from the oil pump, and then connect the special tools.
2. Bleed the air, and then turn the steering wheel several times while the vehicle is not moving so that the temperature of the fluid rises to approximately 50–60°C.
3. The engine should be idling.
4. Disconnect the connection of the connector for the oil pressure switch, and place an ohmmeter in position.
5. Gradually close the shut-off valve of the pressure gauge and increase the hydraulic pressure, then check whether or not the hydraulic pressure that activates the switch is the standard value.

   Standard value: 1.5 – 2.0 MPa

6. Gradually open the shut-off valve and reduce the hydraulic pressure; then check whether or not the hydraulic pressure that deactivates the switch is the standard value.

   Standard value: 0.7 – 1.2 MPa

7. Remove the special tools, and then tighten the pressure hose to the specified torque.

   Tightening torque: 18 Nm

8. Bleed the system

STEERING WHEEL AND SHAFT

37100170013

REMOVAL AND INSTALLATION

Caution: SRS
Before removal of air bag module, refer to GROUP 52B – Service Precautions and Air Bag Module and Clock Spring.

Post-installation Operation
- Checking Steering Wheel Position with Wheels Straight Ahead

<2WD>

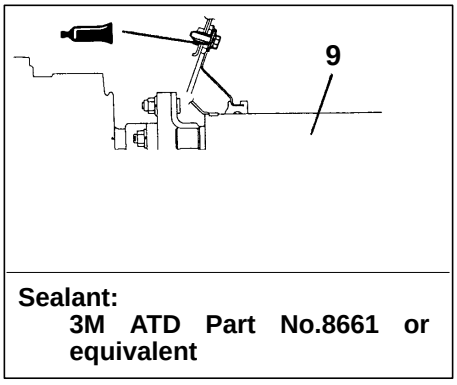

Removal steps

1. Horn pad <Vehicles without SRS>
2. Air bag module (Refer to GROUP 52B – Air Bag Module and Clock Spring.)
◀A▶ 3. Steering wheel
4. Upper column cover
- Instrument under cover (Refer to GROUP 52A – Instrument Panel.)
5. Lower column cover
▶A◀ 6. Column switch <Vehicles without SRS>
▶A◀ 7. Clock spring (Refer to GROUP 52B – Air Bag Module and Clock Spring.)
8. Brake pedal return spring
9. Steering column assembly

<4WD>

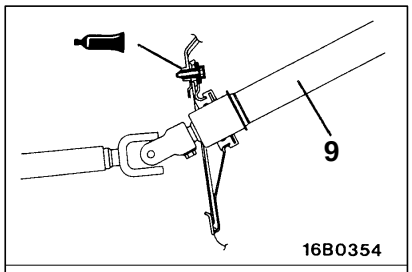

Sealant:
3M ATD Part No.8661 or equivalent

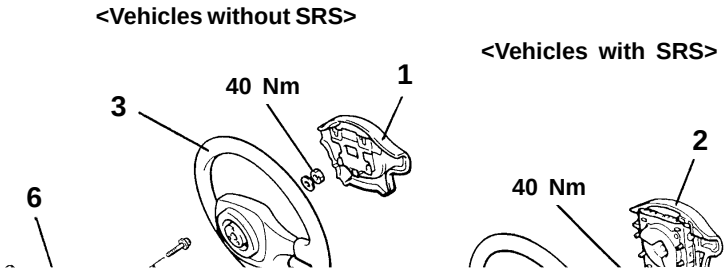

4

3

7

9

12 Nm

5 Nm

5

8

17 Nm

Removal steps

1. Horn pad <Vehicles without SRS>
2. Air bag module
   (Refer to GROUP 52B – Air Bag Module and Clock Spring.)
◀A▶ 3. Steering wheel
4. Upper column cover
5. Lower column cover
▶A◀ 6. Column switch
   <Vehicles without SRS>
▶A◀ 7. Clock spring and column switch
   (Refer to GROUP 52B – Air Bag Module and Clock Spring.)
8. Brake pedal return spring
9. Steering column assembly

MB990803

REMOVAL SERVICE POINT

◀A▶ STEERING WHEEL REMOVAL

INSPECTION

37100230049

PITMAN ARM DUST COVER CHECK

If there are any cracks in or damage to the dust cover, replace the pitman arm. If the dust cover is damaged accidentally during service work, replace the dust cover only. (Refer to P. 37A-25.)

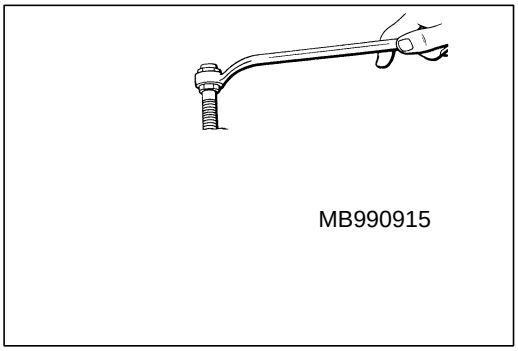

DISASSEMBLY SERVICE POINTS

◀A▶ PITMAN ARM REMOVAL

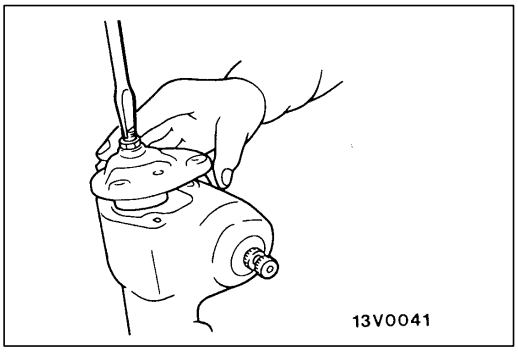

◀B▶ SIDE COVER REMOVAL

1. Loosen the lock nut, and then turn the adjusting bolt anti-clockwise slightly.
2. Screw in the adjusting bolt without turning the side cover, and then remove the side cover.

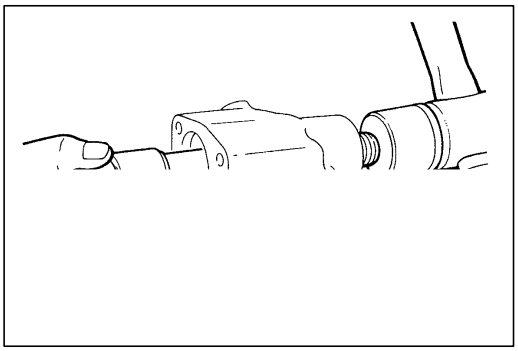

◀C▶ CROSS-SHAFT REMOVAL

With the mainshaft and cross-shaft placed in the straight ahead position, tap the bottom of the cross-shaft with a plastic hammer to take out the cross-shaft together with the top cover.

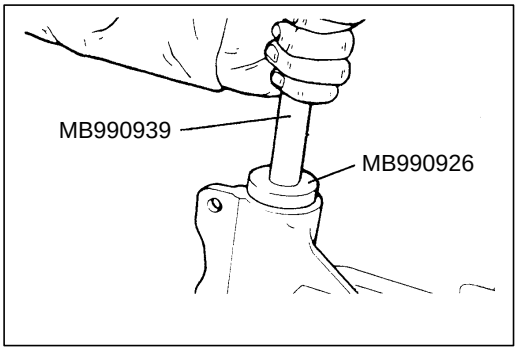

REASSEMBLY SERVICE POINTS

▶A◀ OIL SEAL INSTALLATION

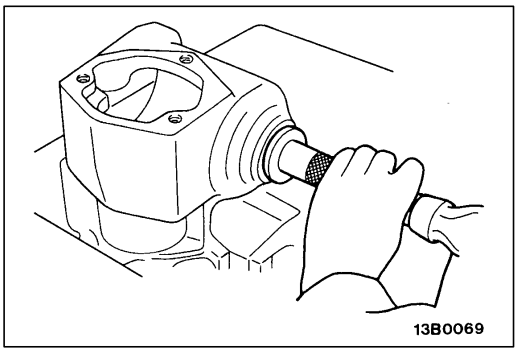

▶B◀ OIL SEAL INSTALLATION

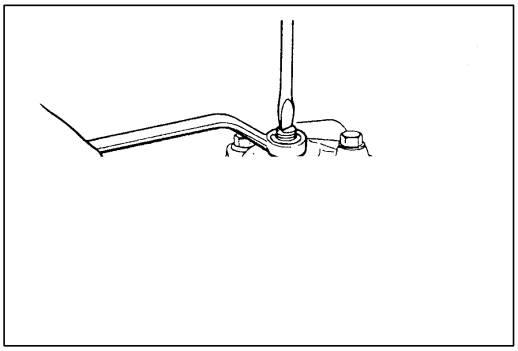

(3) If the measured value is not within the standard value, adjust by turning the adjusting bolt in or out.
(4) If it is not possible, check the following points.
  1) Cross-shaft eccentricity due to improperly installed top cover
  2) Cross-shaft needle roller bearing damaged
  3) End cover improperly installed

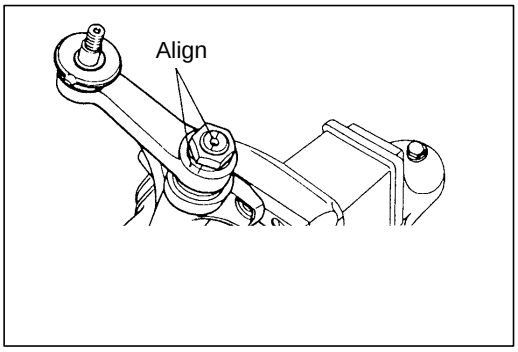

▶G◀ PITMAN ARM INSTALLATION

Install the pitman arm to the gear box with the mating marks aligned.

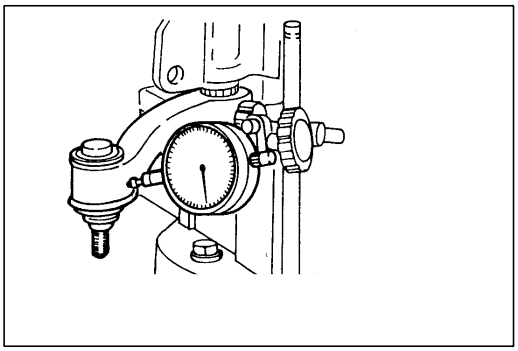

▶H◀ STEERING GEAR BACKLASH CHECK

1. Move the pitman arm to the right and left 3 to 5 times to be sure that the tooth surfaces sufficiently correct with each other.
2. Measure the steering gear backlash at the end of the pitman arm with a dial indicator.

   Limit: 0.5 mm

   Caution
   Measure the steering gear backlash when the mainshaft, cross-shaft and pitman arm are in the straight-ahead position.
3. If the reading exceeds the limit, replace the mainshaft.

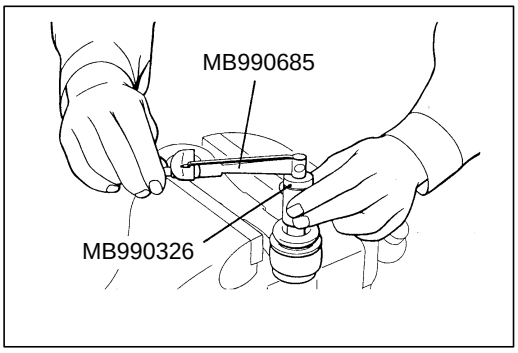

INSPECTION

37100250045

PITMAN ARM BALL JOINT STARTING TORQUE CHECK

After shaking the ball joint stud several times, install the nut to the stud and use the special tool to measure the starting torque of the ball joint.

Standard value: 0.5 – 1.5 Nm

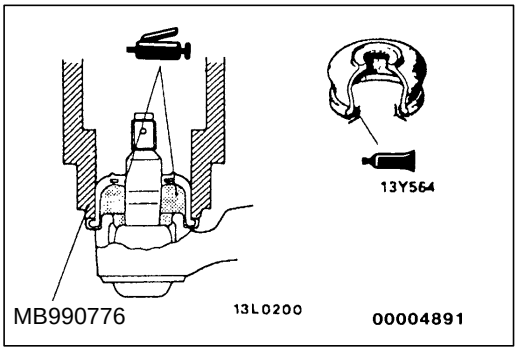

DUST COVER REPLACEMENT

Only when the dust cover is damaged accidentally during service work, replace the dust cover only as follows:

1. Fill inside the dust cover with multipurpose grease.
2. Apply specified sealant to the mounting surface of the dust cover at the pitman arm.

   Specified sealant: 3M ATD Part No.8661 or equivalent

3. Using the special tool, install the dust cover to the pitman arm.

POWER STEERING GEAR BOX

37200390122

REMOVAL AND INSTALLATION

Caution: SRS
For vehicles with SRS, before removal of steering gear box refer to GROUP 52B, center front wheels and remove ignition key. Failure to do so many damage SRS clock spring and render SRS system inoperative, risking serious driver injury.

Pre-removal Operation
- Power Steering Fluid Draining (Refer to P.37A-11.)

Post-installation Operation
- Power Steering Fluid Supplying (Refer to P.37A-11.)
- Power Steering Fluid Line Bleeding (Refer to P.37A-12.)
- Checking Steering Wheel Position with Wheels Straight Ahead
- Front Wheel Alignment Adjustment (Refer to GROUP 33A – On-vehicle Service.)

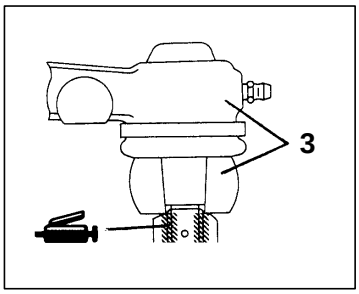

<2WD>

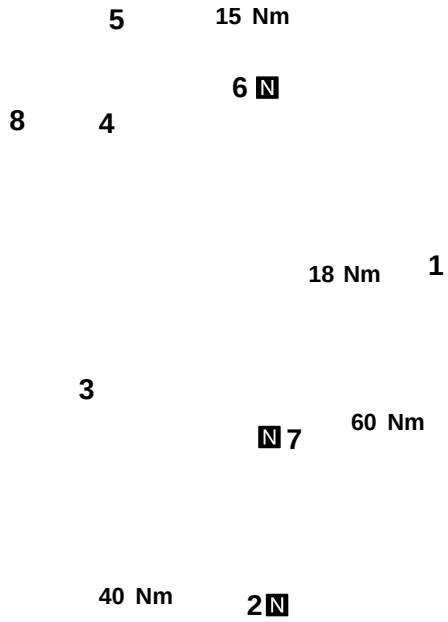

<4WD>

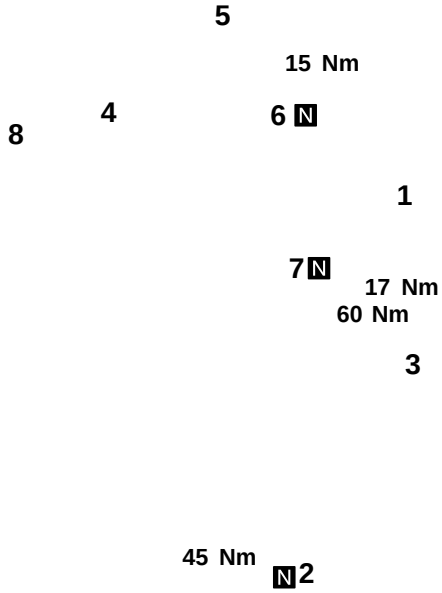

Removal steps

1. Connecting bolt for steering gear box and steering shaft
2. Split pin
3. Connection for pitman arm and relay rod

◀A▶

4. Pressure tube
5. Return tube
6. O-ring
7. Self-locking nut
8. Power steering gear box

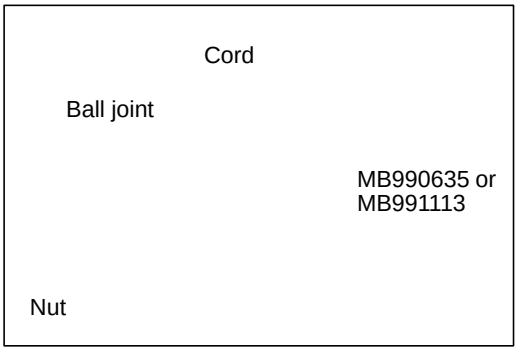

REMOVAL SERVICE POINT

◀A▶ PITMAN ARM AND RELAY ROD DISCONNECTION

Use the special tool to disconnect the ball joint.

Caution

1. **Using the special tool, loosen the tie rod end mounting nut. Only loosen the nut; do not remove it from the ball joint.**
2. **Support the special tool with a cord, etc. to prevent it from coming off.**

INSPECTION

37200400108

PITMAN ARM DUST COVER CHECK

If there are any cracks in or damage to the dust cover, replace the pitman arm. (Refer to P. 37A-36 .)

DISASSEMBLY

37200420029

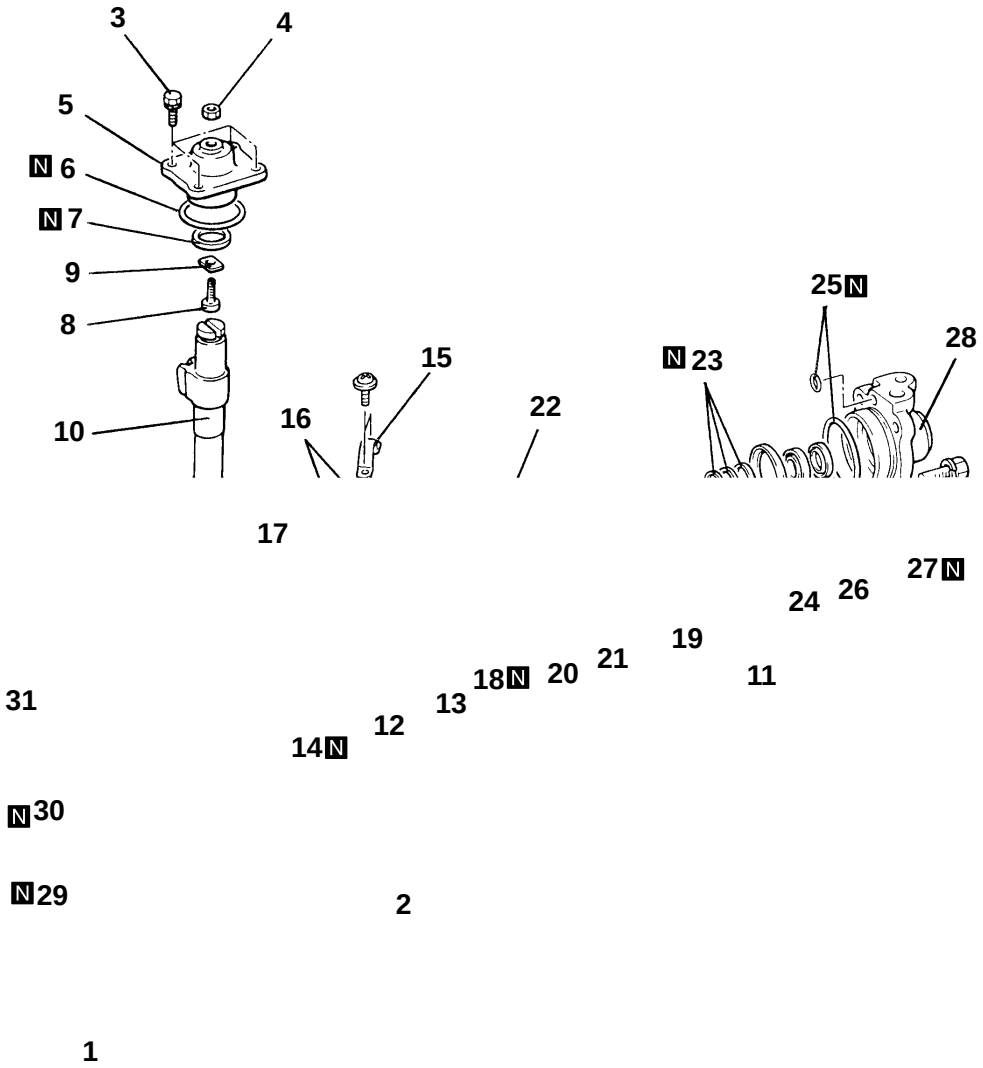

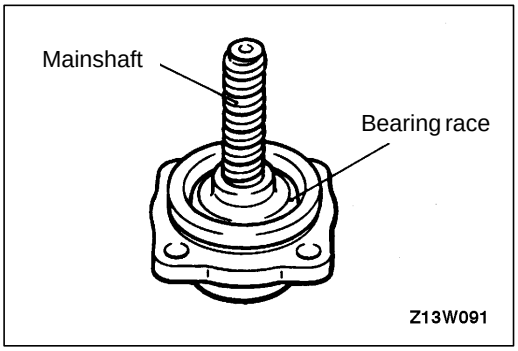

◀F▶ MAINSHAFT, BEARING RACE AND BALL REMOVAL

Remove the mainshaft while pressing the bearing race so that the balls do not come out.

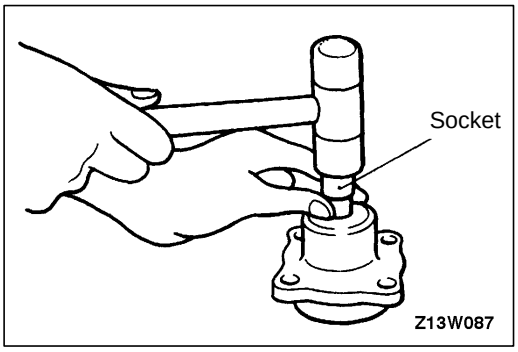

◀G▶ BEARING AND OIL SEAL REMOVAL

Using a socket, remove the oil seal and bearing from the valve housing simultaneously.

REASSEMBLY

37200430022

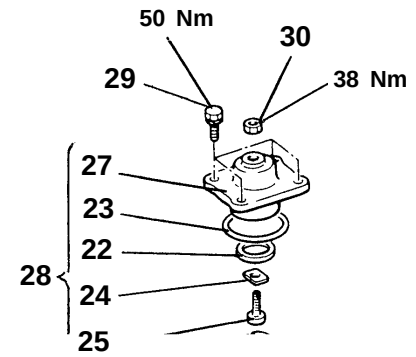

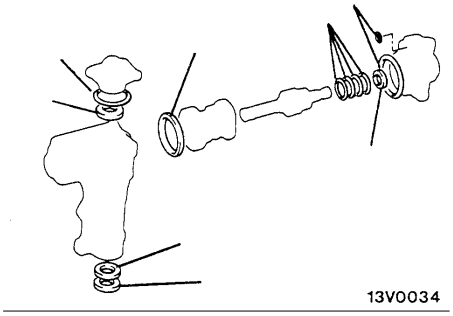

Gear box seal kit

7■ 20

19

N 8

26

18 10

50 Nm

17

1

4 N

5

6

12

9

21

13 N 11

15

14 N 16

2

N 3

31

32

127 – 147 Nm

Cross-shaft plate set

Cross-shaft seal kit

LUBRICATION AND SEALING POINTS

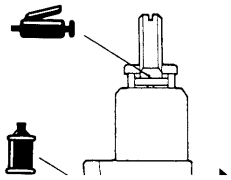

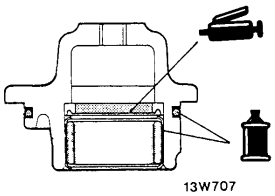

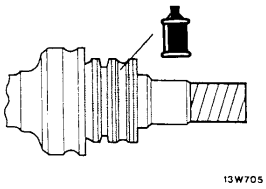

Automatic transmission fluid DEXRON or DEXRON II

Automatic transmission fluid DEXRON or DEXRON II

Automatic transmission fluid DEXRON or DEXRON II

Automatic transmission fluid DEXRON or DEXRON II

Sealant:
3M ATD Part No.8661 or equivalent

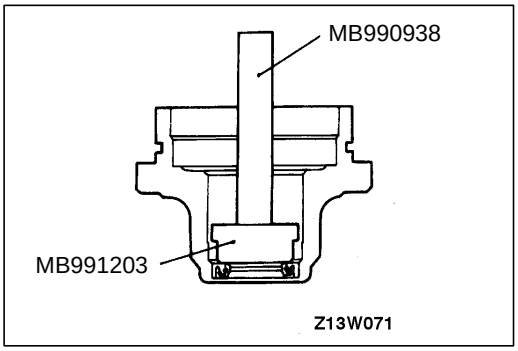

▶B◀ OIL SEAL INSTALLATION

Apply a coating of the specified fluid to the outside of the bearing. Using the special tools, press the oil seal into the valve housing.

Specified fluid:
Automatic transmission fluid DEXRON or DEXRON II

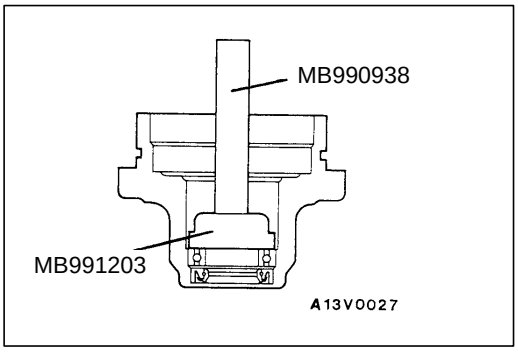

▶C◀ BEARING INSTALLATION

Apply a coating of the specified fluid to the outside of the bearing. Using the special tools, press the bearing into the valve housing.

Specified fluid:
Automatic transmission fluid DEXRON or DEXRON II

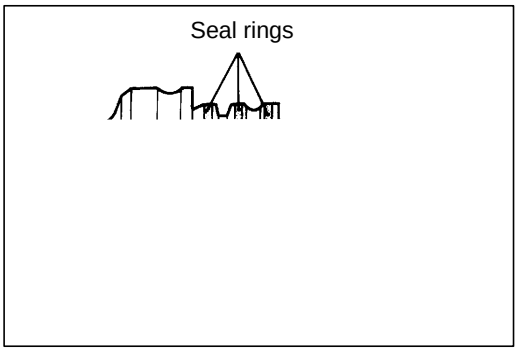

▶D◀ SEAL RING INSTALLATION

Press the seal ring firmly into the valve groove.

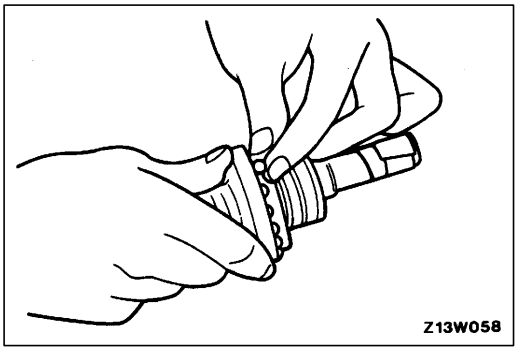

▶E◀ CAGE, BALLS, BEARING RACE AND MAINSHAFT INSTALLATION

1. Apply specified fluid to the mainshaft.

   Specified fluid:
   Automatic transmission fluid DEXRON or DEXRON II
2. Wrap vinyl tape around the serrated part so that the oil seal won't be damaged when the mainshaft is installed to the valve housing.
3. Mount the mainshaft to the valve housing.
4. Align the cage's hole and the channel in the mainshaft and insert two or three balls.
5. Insert the remainder of the balls into the cage's hole while pressing the ball with the bearing race.
6. When installing the mainshaft, connect it to the valve housing while pressing the bearing race so that the balls do not come out.

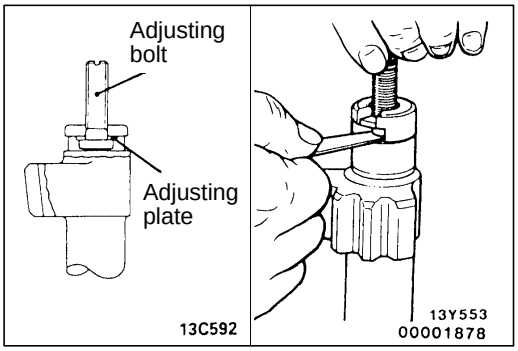

▶I◀ CROSS-SHAFT AXIAL PLAY ADJUSTMENT

1. Install the adjusting plate so that the beveled part is facing downward.
2. Using a thickness gauge, measure the clearance between the adjusting bolt and cross-shaft.

   Standard value: 0.05 mm or less

3. If the clearance exceeds the standard value, replace with a suitable adjusting plate.

▶J◀ CROSS-SHAFT INSTALLATION

Set the rack piston in the neutral position and install the cross-shaft.

Caution
Do not rotate the side cover during installation. Take care not to damage the cross-shaft oil seal.

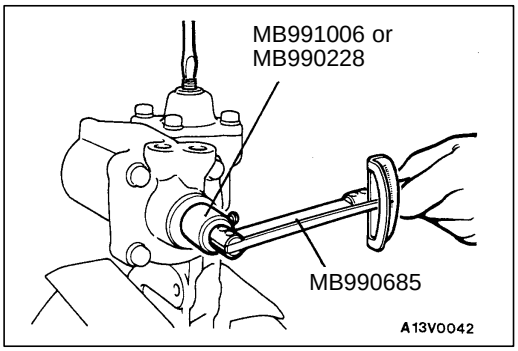

▶K◀ MAINSHAFT TOTAL STARTING TORQUE ADJUSTMENT

1. While turning the adjusting bolt, measure the mainshaft total starting torque by using the special tools.

   Standard value:
   <2WD> 0.98 – 1.47 Nm
   <4WD> 0.69 – 1.28 Nm

   Caution
   Adjust by turning adjusting bolt so that the starting torque at the centre position of the rack piston is approximately 0.2 Nm higher than the values at the both ends of the rack piston.

2. Tighten the adjusting bolt lock nut to the specified torque.

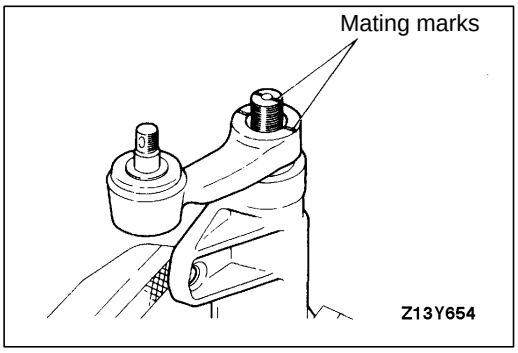

▶L◀ PITMAN ARM INSTALLATION

Install the pitman arm to the gear box with the mating marks aligned.

POWER STEERING OIL PUMP

37200520163

REMOVAL AND INSTALLATION

Pre-removal Operation
- Power Steering Fluid Draining (Refer to 37A-11.)

Post-installation Operation
- Power Steering Fluid Supplying (Refer to 37A-11.)
- Drive Belt Tension Check (Refer to 37A-11.)
- Power Steering Fluid Line Bleeding (Refer to 37A-12.)
- Oil Pump Pressure Check (Refer to 37A-13.)

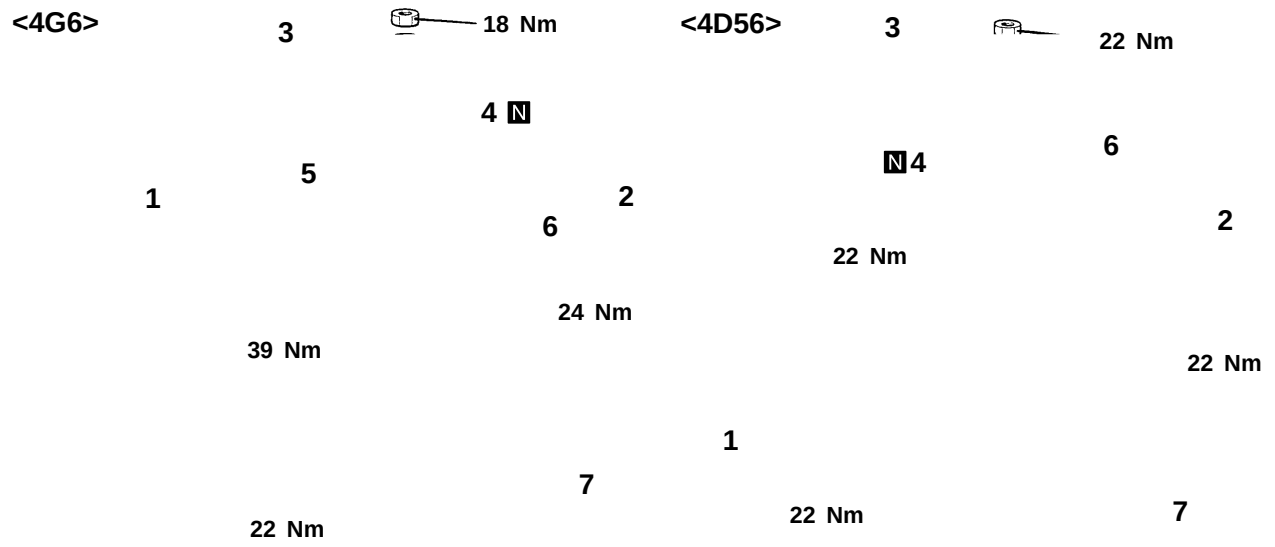

Removal steps
1. Drive belt
2. Suction hose
3. ▶A◀ Pressure hose
4. O-ring
5. Pressure switch connector <4G6>
6. Oil pump
7. Oil pump bracket

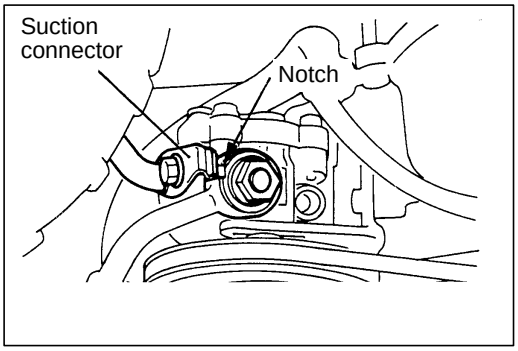

INSTALLATION SERVICE POINTS

▶A◀ PRESSURE HOSE INSTALLATION

Connect the pressure hose so that the notch part contacts the suction connector.

INSPECTION

37200530067

Check the drive belt for cracks.
Check the pulley assembly for uneven rotation.

DISASSEMBLY AND REASSEMBLY <4G6>

37200540121

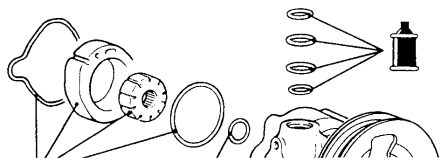

Fluid:
Automatic transmission fluid DEXRON or DEXRON II

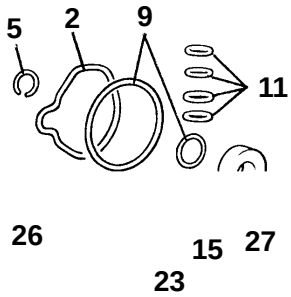

Oil pump seal kit

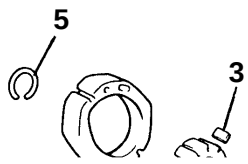

Oil pump cartridge kit

Pulley and shaft kit

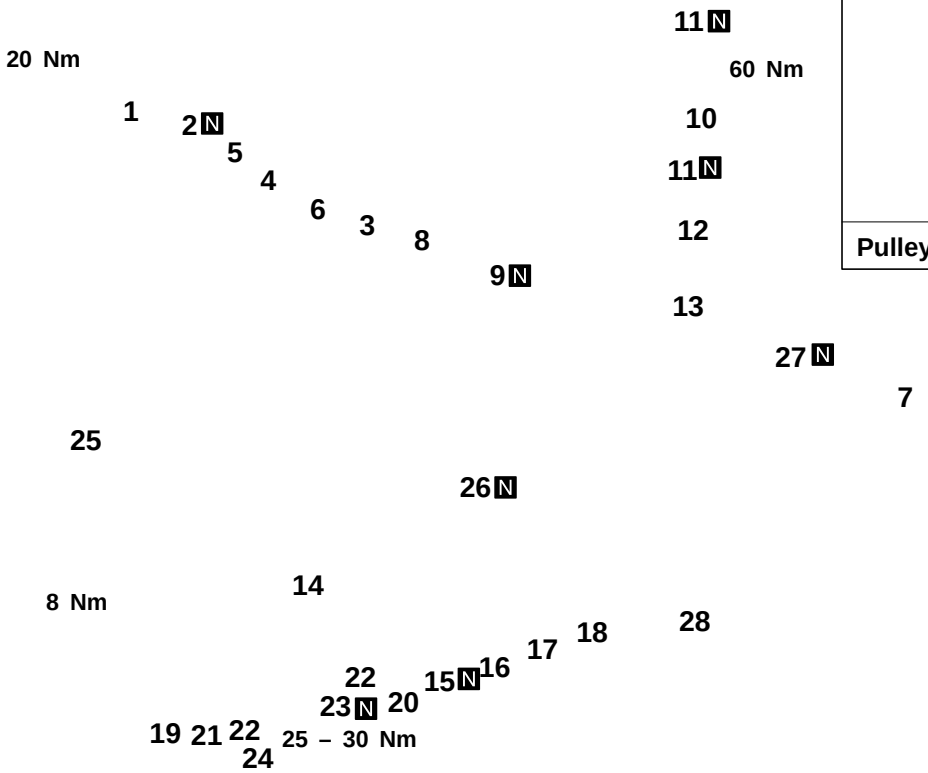

Disassembly steps

1. Pump cover
2. O-ring
3. ▶H◀ Vanes
4. ▶G◀ Cam ring
5. ◀A▶ ▶F◀ Snap ring
6. ▶E◀ Rotor
7. Pulley assembly
8. ▶D◀ Side plate
9. ▶B◀ O-ring
10. Connector
11. ▶B◀ O-ring
12. Flow control valve
13. Flow control spring
14. Terminal assembly
15. ▶B◀ O-ring
16. ▶C◀ Spring
17. Plunger
18. Piston rod
19. Snap ring
20. Terminal
21. Washer
22. Insulator
23. ▶B◀ O-ring
24. Plug
25. Suction connector
26. ▶B◀ O-ring
27. ▶A◀ Oil seal
28. Oil pump body

Caution
Do not disassemble the flow control valve.

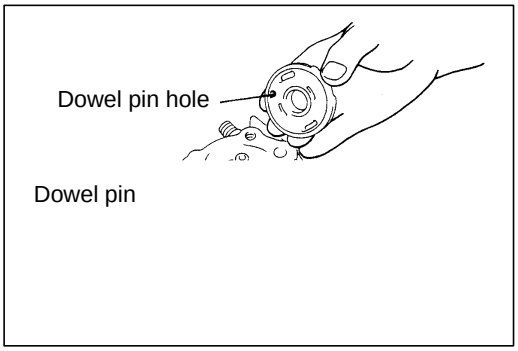

▶D◀ SIDE PLATE INSTALLATION

Line up the dowel pin hole of the side plate with the dowel pin of the pump body when installing the side plate.

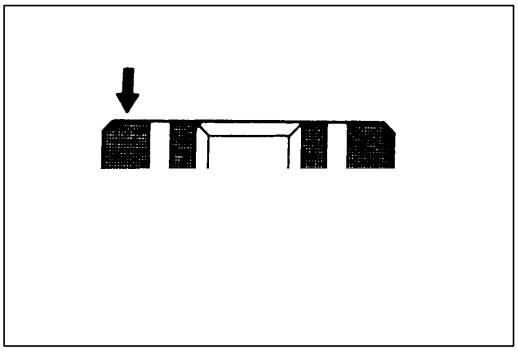

▶E◀ ROTOR INSTALLATION

Install the rotor to the pulley assembly so that the rotor's punch mark is at the pump cover side.

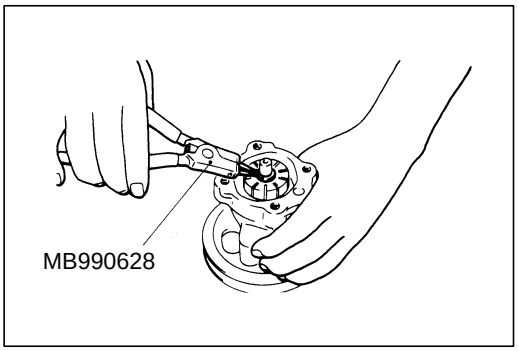

▶F◀ SNAP RING INSTALLATION

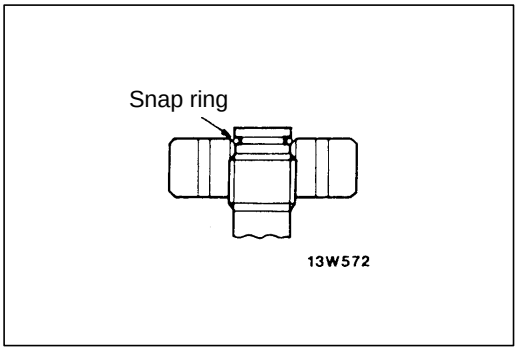

After installation of the snap ring, lift the rotor and check that the snap ring has entered the countersunk part.

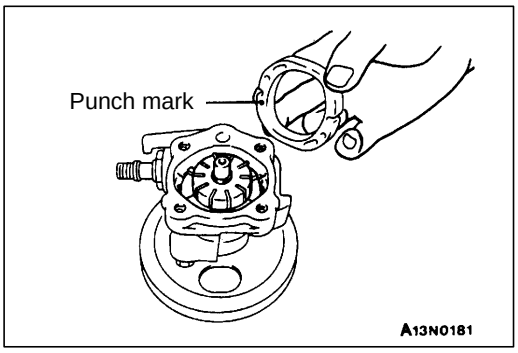

▶G◀ CAM RING INSTALLATION

Install the cam ring with the punch mark facing the side plate.

DISASSEMBLY AND REASSEMBLY <4D56>

37200540138

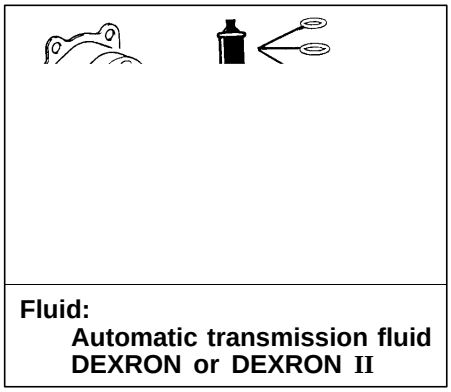

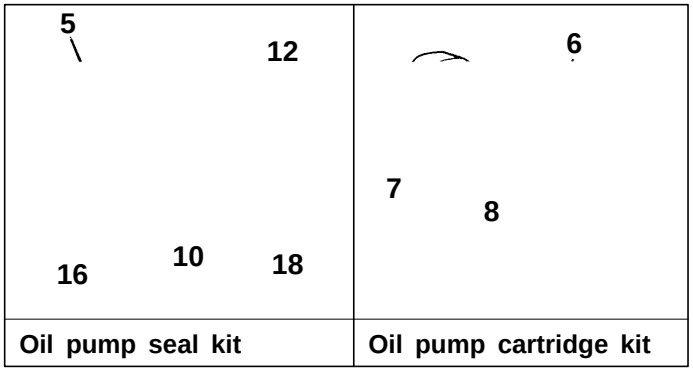

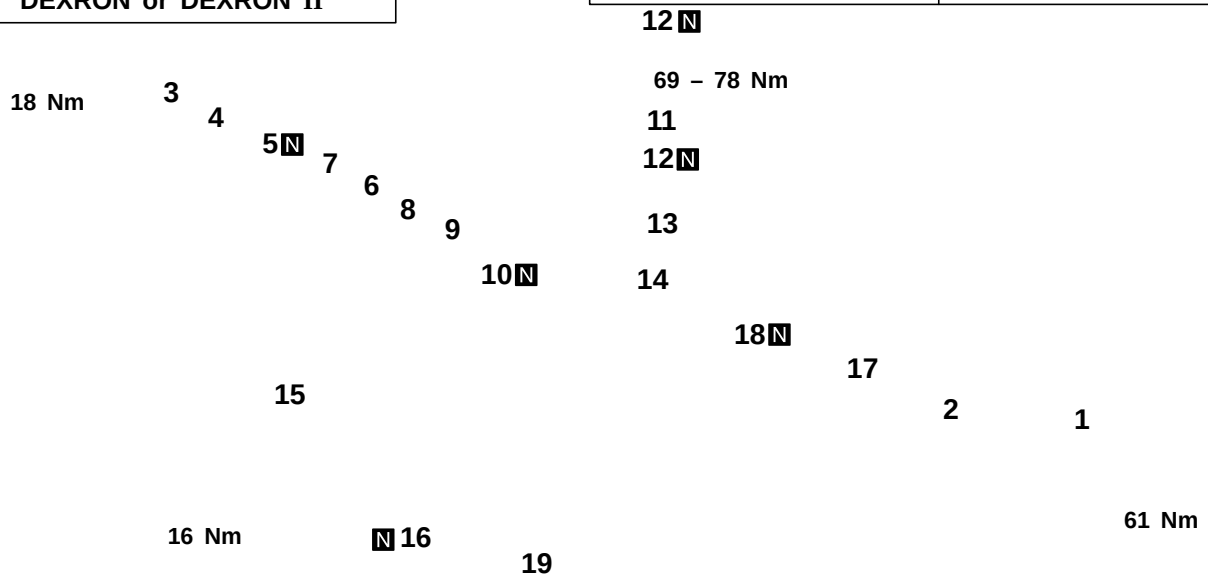

Disassembly steps

◀A▶ ▶G◀ 1. Drive pulley
2. Snap ring
3. Pump cover
4. Lock pin
5. Seal washer
▶F◀ 6. Vanes
▶E◀ 7. Cam ring
▶D◀ 8. Rotor
9. Side plate
▶C◀ 10. O-ring
11. Connector
▶C◀ 12. O-ring
13. Flow control valve
14. Flow control spring
15. Suction connector
▶C◀ 16. O-ring
▶B◀ 17. Drive shaft assembly
▶A◀ 18. Oil seal
19. Oil pump body

Caution
Do not disassemble the flow control valve.

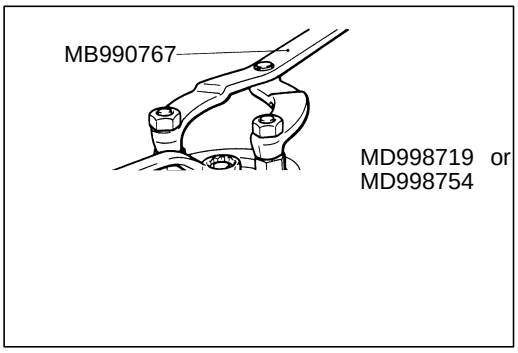

DISASSEMBLY SERVICE POINT

◀A▶ DRIVE PULLEY REMOVAL

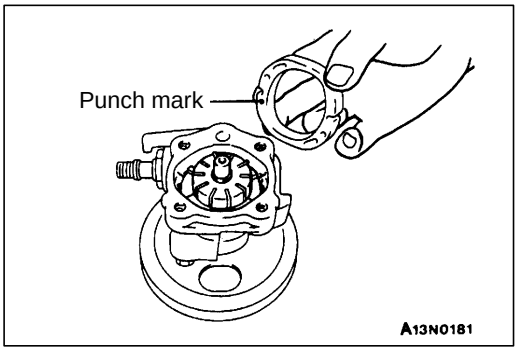

▶E◀ CAM RING INSTALLATION

Install the cam ring with the punch mark facing the side plate.

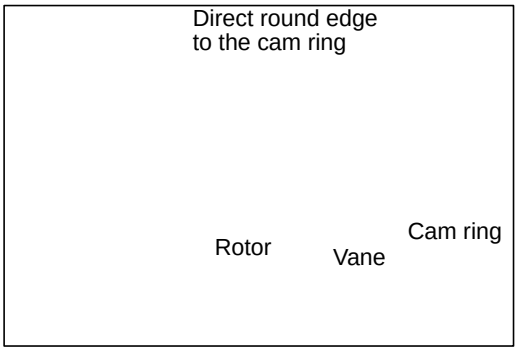

▶F◀ VANE INSTALLATION

Install the vanes on the rotor, paying close attention to the installation direction.

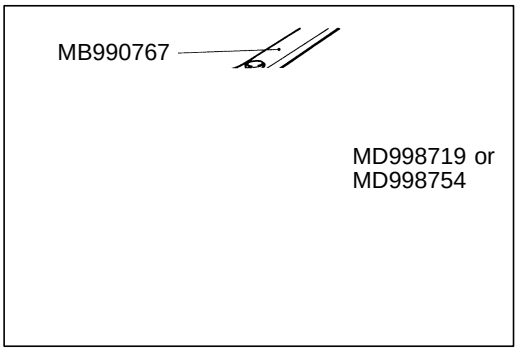

▶G◀ DRIVE PULLEY INSTALLATION

INSPECTION

37200550087

- Check the flow control valve for clogging.
- Check the pulley assembly for wear or damage.
- Check the groove of rotor and vane for “stepped” wear.
- Check the contact surface of cam ring and vanes for “stepped” wear.
- Check the vanes for damage.

POWER STEERING HOSES

37200570151

REMOVAL AND INSTALLATION

Pre-removal Installation
- Power Steering Fluid Draining (Refer to P.37A-11.)
- Radiator Grille Removal

Post-installation Operation
- Radiator Grille Installation
- Power Steering Fluid Supplying (Refer to P.37A-11.)
- Power Steering Fluid Line Bleeding (Refer to P.37A-12.)

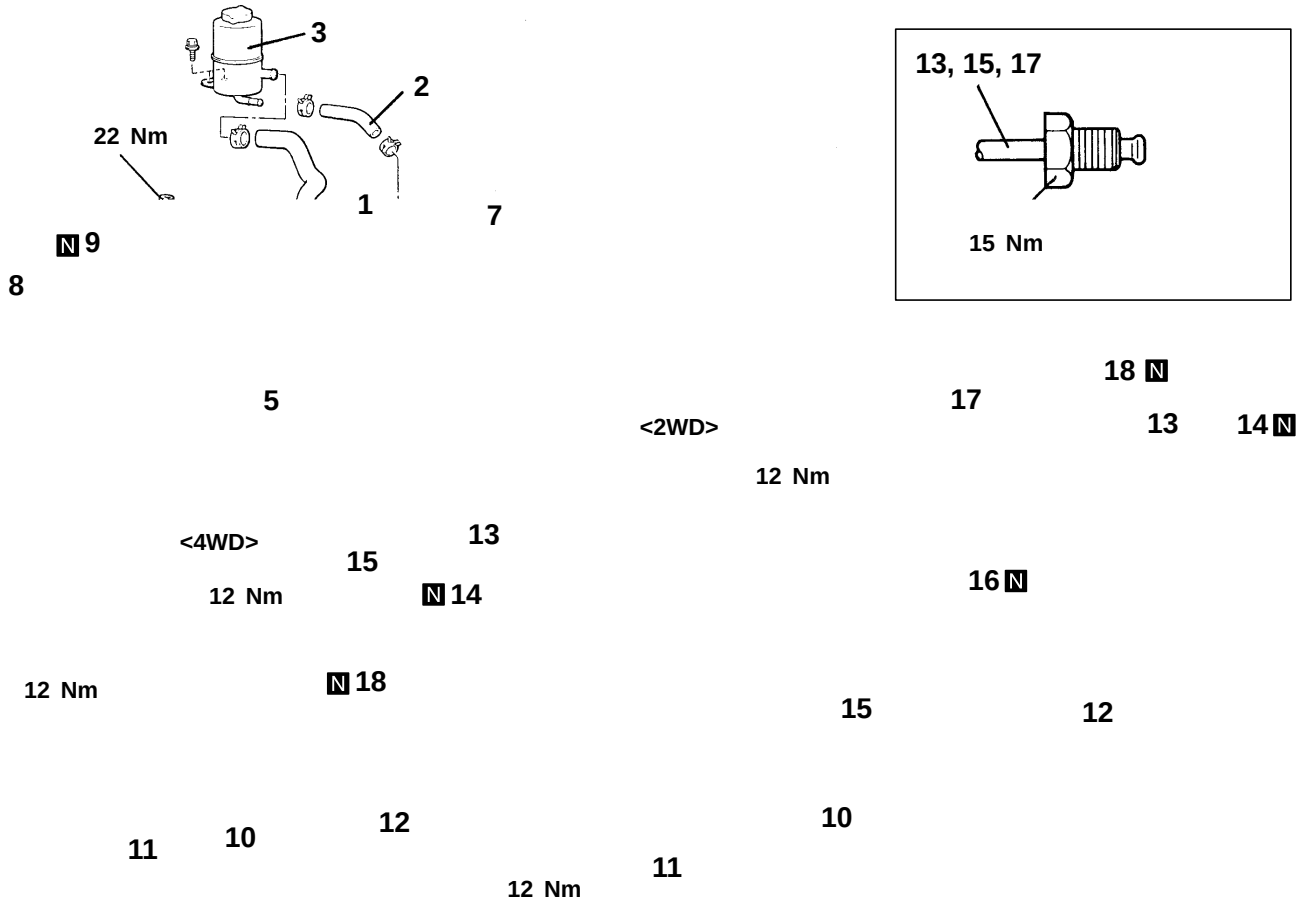

Removal steps

- ▶F◀ 1. Suction hose
- 2. Return hose
- 3. Oil reservoir
- ▶E◀ 5. Return hose
- 7. Return tube
- ▶D◀ 8. Pressure hose
- 9. O-ring
- ▶C◀ 10. Return tube
- ▶B◀ 11. Tube stay
- 12. Return hose
- ▶A◀ 13. Return tube
- 14. O-ring
- 15. Pressure tube
- 16. O-ring
- 17. Pressure tube
- 18. O-ring

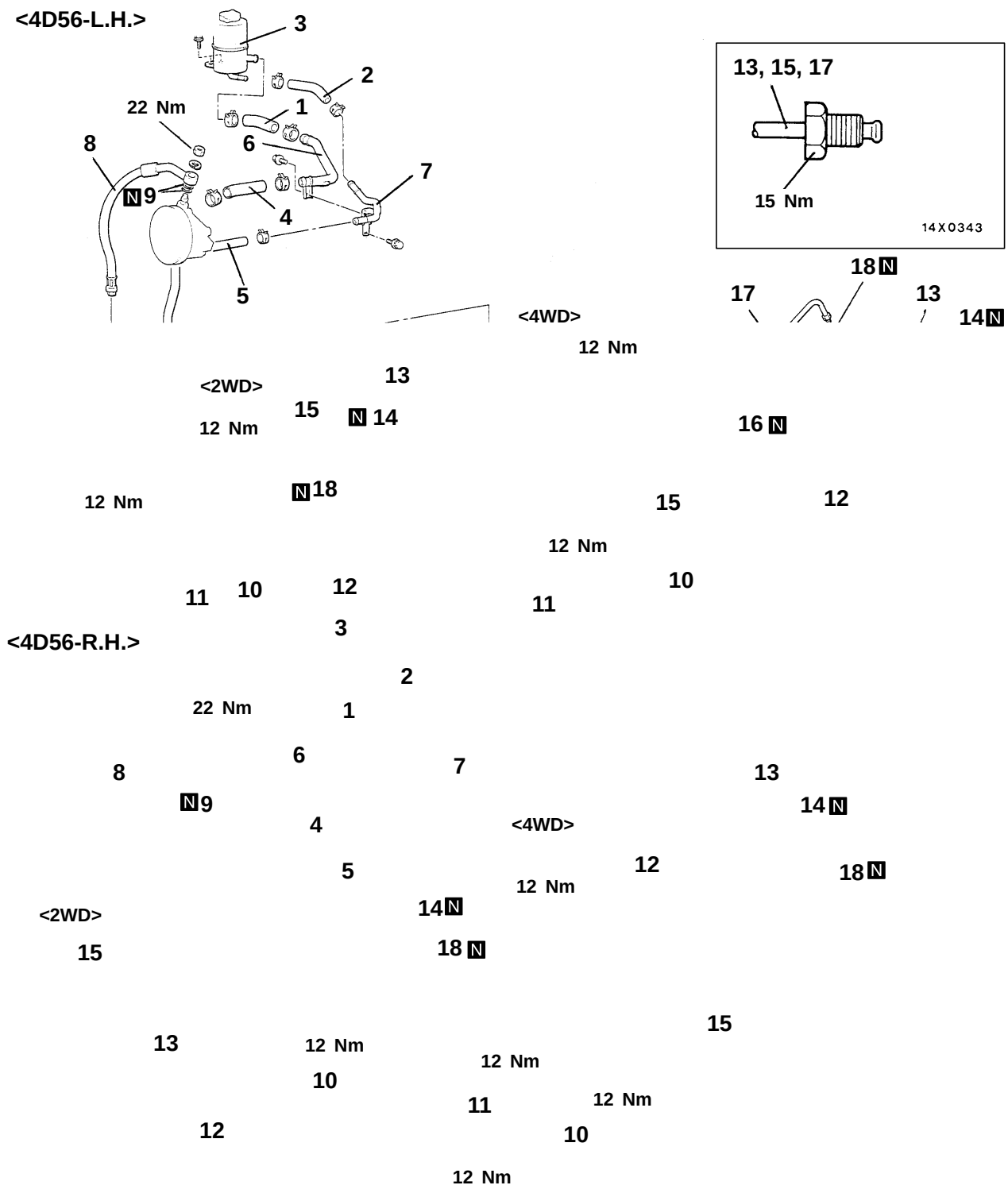

Removal steps

- ▶F◀ 1. Suction hose
- 2. Return hose
- 3. Oil reservoir
- ▶F◀ 4. Suction hose
- ▶E◀ 5. Return hose
- 6. Suction tube
- 7. Return tube
- ▶D◀ 8. Pressure hose
- 9. O-ring
- ▶C◀ 10. Return tube
- ▶B◀ 11. Tube stay
- 12. Return hose
- ▶A◀ 13. Return tube
- 14. O-ring
- 15. Pressure tube
- 16. O-ring

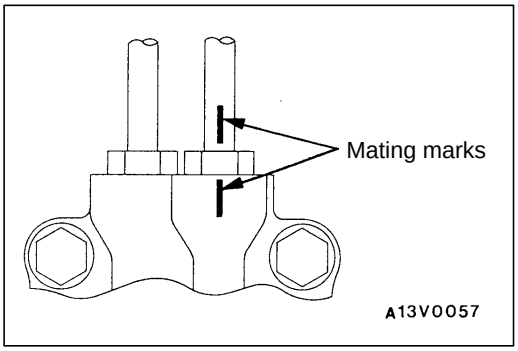

INSTALLATION SERVICE POINTS

▶A◀ RETURN TUBE INSTALLATION

Align the marks on the return tube and steering gear box, and install the return tube.

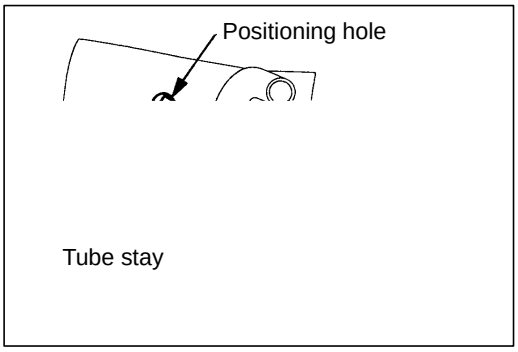

▶B◀ TUBE STAY INSTALLATION

Fit the protrusion of the tube stay to the positioning hole.

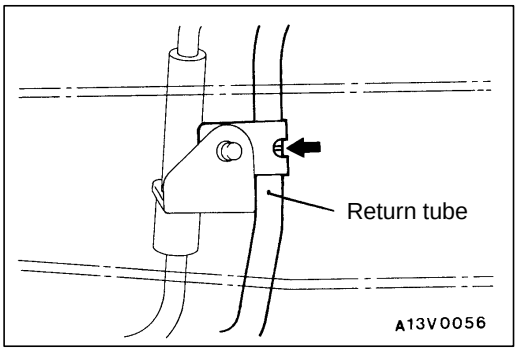

▶C◀ RETURN TUBE INSTALLATION

Connect the return tube so that the marking is positioned as shown in the illustration.

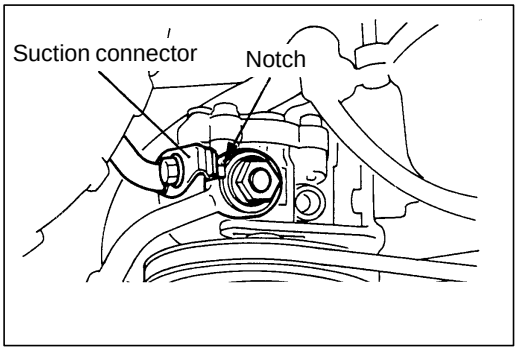

▶D◀ PRESSURE HOSE INSTALLATION

1. Connect the pressure hose so that the its notch part contacts the suction connector.

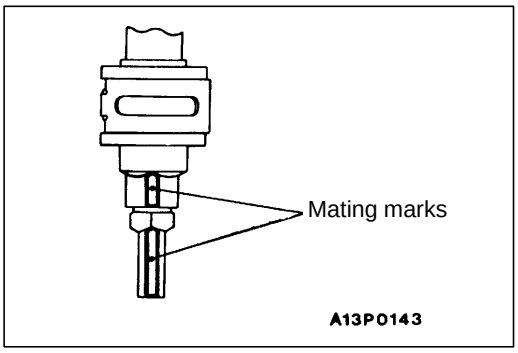

2. Align the marks on the pressure hose and pressure tube, and install the pressure hose.

STEERING LINKAGE

37100300016

REMOVAL AND INSTALLATION

Post-installation Operation
- Checking Steering Wheel Position with Wheels Straight Ahead
- Front Wheel Alignment (Refer to GROUP 33A – On-vehicle Service.)

<2WD>

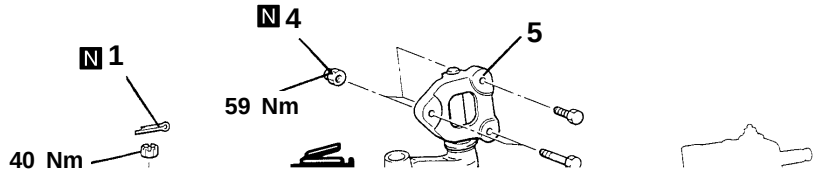

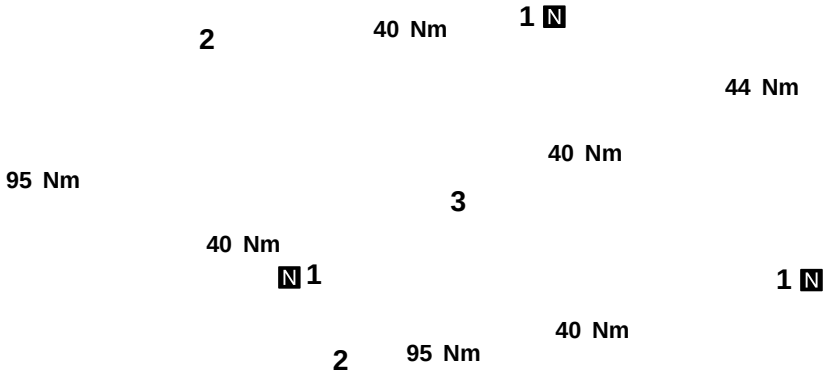

<4WD>

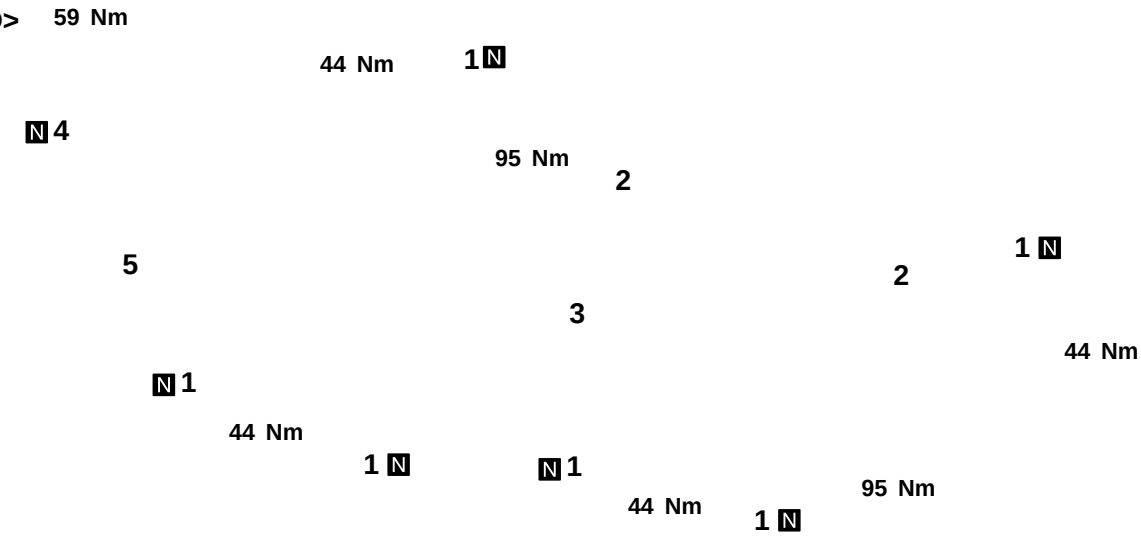

Removal steps

1. Split pin
2. Tie rod assembly ◀A▶ ▶A◀
3. Relay rod ◀A▶
4. Self-locking nut
5. Idler arm assembly ◀A▶

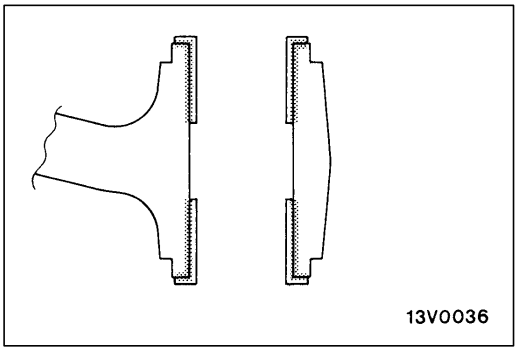

▶C◀ BUSHING INSTALLATION

1. Apply a neutral detergent to the inside of the idler arm and to the outside of the bushings.
2. Insert the bushings as far as the stepped section. If they won't go in easily, use a vice to push them in.

   Caution
   Wipe off the detergent after the bushings are inserted.

3. Apply multipurpose grease to the inside of the bushings and in between the bushings.

   Caution
   Do not apply grease to the outside of the bushings.

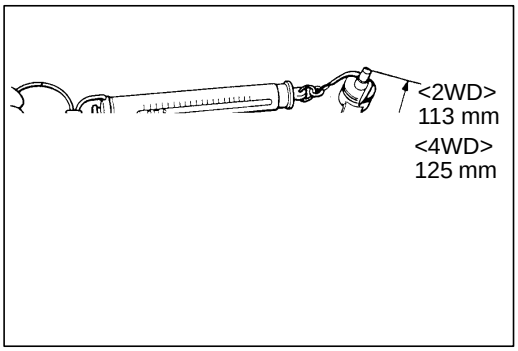

INSPECTION

37100350011

IDLER ARM SLIDING RESISTANCE

Standard value:
<2WD> 8.8 – 30 N [1.0 – 3.4 Nm]
<4WD> 2.4 – 16 N [0.3 – 2.0 Nm]

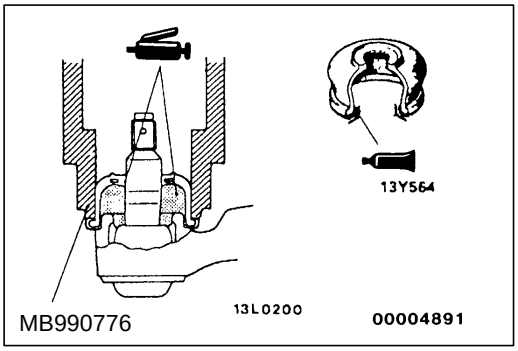

DUST COVER REPLACEMENT

Only when the dust cover is damaged accidentally during service work, replace the dust cover only as follows:

1. Fill inside the dust cover with multipurpose grease.
2. Apply the specified sealant to the dust cover lip.

   Specified sealant: 3M ATD Part No.8661 or equivalent

3. Using the special tool, install the dust cover to the tie rod end ball joint.

SERVICE BULLETIN

QUALITY INFORMATION ANALYSIS
OVERSEAS SERVICE DEPT. MITSUBISHI MOTORS CORPORATION

MOTORS

SERVICE BULLETIN	No.: MSB-98E37-002		
	Date: 1999-08-15	<Model>	<M/Y>
Subject: NEW SERVICE PROCEDURE FOR POWER STEERING GEARBOX		(EC,EXP) L200 (K00)	97-10
Group: STEERING	Draft No.: 98SY100912	(EC,EXP) PAJERO (V10,V20,V30,V40)	95-10
INFORMATION	OVERSEAS SERVICE DEPT	T.NITTA - VICE GENERAL MANAGER QUALITY INFORMATION ANALYSIS	

1. Description:

The mainshaft valve assembly in the power steering gearbox is now available only as an assembly (supply of individual components and parts discontinued). Accordingly, the service procedure for the power steering gearbox is also changed as shown in the attached sheets.

2. Applicable Manuals:

Manual	Pub. No.	Language	Page(s)
'97 L200 Workshop Manual CHASSIS	PWTE96E1	(English)	37A-3-~6, 28-34
	PWTS96E1	(Spanish)	
	PWTF96E1	(French)	
	PWTG96E1	(German)	
'95 PAJERO Workshop Manual CHASSIS	PWJE9086-F	(English)	37-3, 4, 6, 25-32
	PWJF9088-F	(French)	
	PWJG9089-F	(German)	
	PWJD9090-F	(Dutch)	
	PWJW9091-F	(Swedish)	
'95 MONTERO Workshop Manual CHASSIS	PWJS9087-F	(Spanish)	

3. Interchangeability:

Not interchangeable

4. Effective Date:

From when the part stock has been exhausted

SERIVICE SPECIFICATIONS

37100030021

Items			Standard value	Limit
Steering Wheel free play mm		With engine running	-	50
		With engine stopped	10 or less	-
Steering angle	2WD	Inner wheel	33°55'-36°55'	-
		Outer wheel	30°57'	-
	4WD	Inner wheel	29°40'-32°40'	-
		Outer wheel	29°30'	
Steering gear backlash mm			-	0.5
Variation of tie rod end ball joint shaft direction mm			-	1.5
Tie rod end ball joint starting torque Nm			3.0	-
Steering gear oil level mm			22	-
Engine idle speed r/min		4G6	750 ± 100	-
		4D56	750 ± 100	-
Stationairy steering effort N			39.2 or less	-
Oil pump pressure MPa	Oil pump relief pressure		8.3 - 9.0	-
	Pressure under no-load conditions		0.8 - 1.0	-
	Steering gear retention hydraulic pressure		8.3 - 9.0	-
Oil pressure switch operating pressure Mpa		OFF ON	1.5 – 2.0	-
		ON OFF	0.7 – 1.2	-
Mainshaft starting torque Nm			0.49 – 0.78	-
Cross-shaft axial play mm			0.05 or less	-
Mainshaft total starting torque Nm		<2WD>	0.98 – 1.47	-
		<4WD>	0.69 – 1.28	-
Pitman arm ball joint starting torque Nm			0.5 – 1.5	-
~~Mainshaft axial play mm~~			~~0.03 or less~~	~~-~~
Backlash between ball groove of rack piston and balls mm			-	0.05
Idler arm sliding resistance N		2WD	8.8 – 30	-
		4WD	2.4 – 16	-

<Deleted>

LUBRICANTS

37100040017

Items	Specified lubricants	Quantity l
Manual steering gear oil	Hypoid gear oil API GL-4 higher SAE80	0.21
Power steering fluid	Automatic transmission fluid DEXRON or DEXRON II	0.8
~~Seal rigg~~, rack piston, ~~mainshaft~~, cross-shaft, ~~bearing~~, O-ring, ~~oil seal~~, vane	Automatic transmission fluid DEXRON or DEXRON II	As required

<Deleted>

SEALANTS

37100050010

Items	Specified sealants	Remarks
Cover assembly installation hole Adjusting bolt, seal bolt, packing, adjusting shim, dust cover lip for ball joint	3M ATD Part No. 8663 or equivalent	Semi-drying sealant

SPECIAL TOOLS

37100060013

Tools	Number	Name	Use
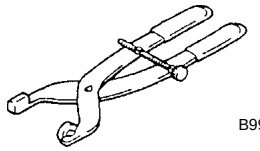 B990948	MB990948	Linkage joint gauge	Ball joint variation check for shaft direction
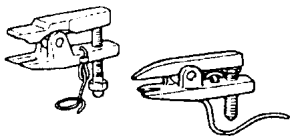 00003982	MB991113 or MB990635	Steering linkage puller	Disconnection of ball joint
	MB990685 MB991151	Torque wrench	Measurement of the ball joint starting torque Measurement of the shaft preload Measurement of the mainshaft starting torque
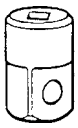	MB990326	Preload socket	Measurement of the ball joint starting torque
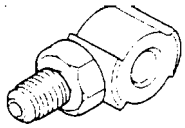 B990993	MB990993 or MB991217	Power steering oil pressure gauge adapter (pump side)	Measurement of oil pressure

Tools	Number	Name	Use
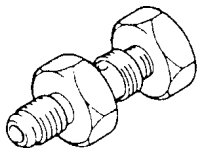 B990994	MB990994	Power steering oil pressure gauge adapter (hose side)	Measurement of oil pressure
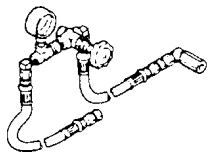 B990662	MB990662	Oil pressure gauge assembly	
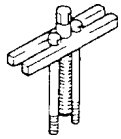 B990803	MB990803	Steering wheel puller	Disconnection of the steering wheel
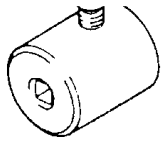 B991006	MB991006 or MB990228	Preload socket	Measurement of the mainshaft total starting torque
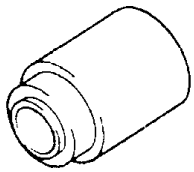 B990776	MB990776	Front axle base	Installation of dust cover for tie rod end ball joint
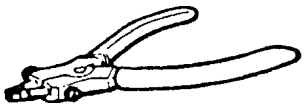	MB990628	Snap ring pliers	To remove and install the snap ring of the pulley asembly
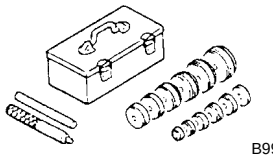 B990925	MB990925	Bearing and oil seal installer set	Installation of the oil seal and bearing (Refer to GROUP 26 – Special tools)
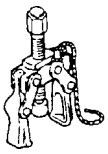 B990915	MB990915	Pitman arm puller	Removal of the pitman arm
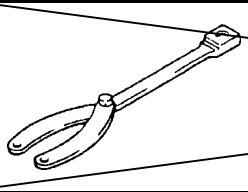 B991367	MB991367	Special spanner	Removal and installation of the lock nut

<Deleted>

DISASSEMBLY

37200420029

<New>

<Old>

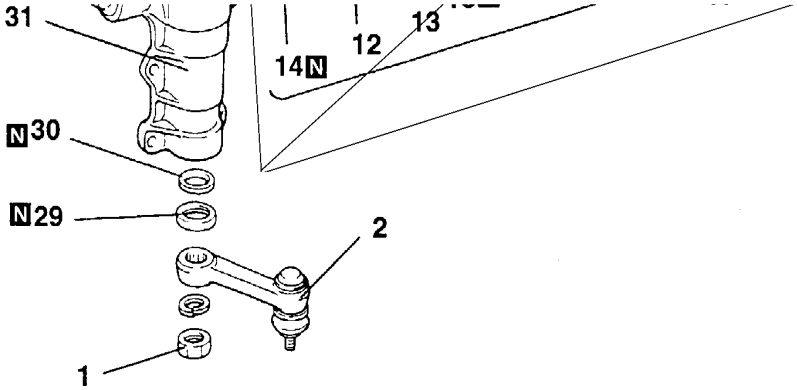

A13V0108

Disassembly steps

1. Jam nut
2. ! A Pitman arm
3. Bolts
4. Adjusting bolt locking nut
5. ! B Side cover
6. O-ring
7. Y-packing
8. Adjusting bolt
9. Adjusting plate
10. ! C Cross-shaft
11. Mainshaft and valve assembly
12. ~~! D Rack piston~~
13. ~~Spacer~~
14. Seal ring
15. ~~Circulator holder~~
16. ~~Circulator~~
17. ~~Ball~~
18. ~~! E Lock nut~~
19. ~~! F Mainshaft~~
20. ~~! F Bearing race~~
21. ~~Cage~~
22. ~~! F Ball~~
23. ~~Seal ring~~
24. ~~Bearing race~~
25. O-ring
26. ~~! G Bearing~~
27. ~~! G Oil seal~~
28. ~~Valve housing~~
29. Oil seal
30. Y-packing
31. Gear box housing

<Deleted>

<Added>

14-1. O-ring

<Deleted>

DISASSEMBLY SERVICE POINTS

! A: PITMAN ARM REMOVAL

13Y018

! B: SIDE COVER REMOVAL

1. Loosen the lock nut and then turn the adjusting bolt anti-clockwise slightly.
2. Screw in the adjusting bolt without turning the side cover, and then remove the side cover.

13V0043

! C: CROSS-SHAFT REMOVAL

With the mainshaft and cross-shaft placed in the straight ahead position, tap the bottom of the cross-shaft with a plastic hammer to take out the cross-shaft together with the side cover.

13V0033

<Deleted>

! D: RACK PISTON REMOVAL

Remove the rack piston from the mainshaft by turning it counterclockwise.

Caution

Be careful not to lose the 26 balls inside the rack piston.

Z13W094

! E: LOCK NUT REMOVAL

Z13W719

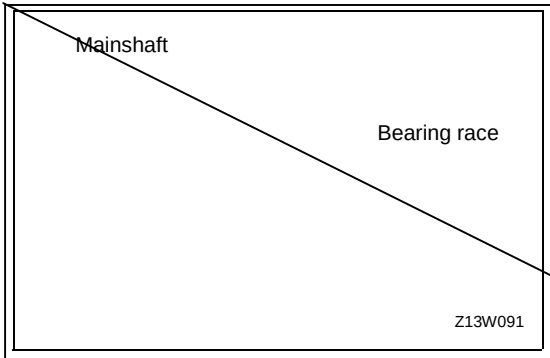

! F MAINSHAFT, BEARING RACE AND BALL REMOVAL

Remove the mainshaft while pressing the bearing race so that the balls do not come out.

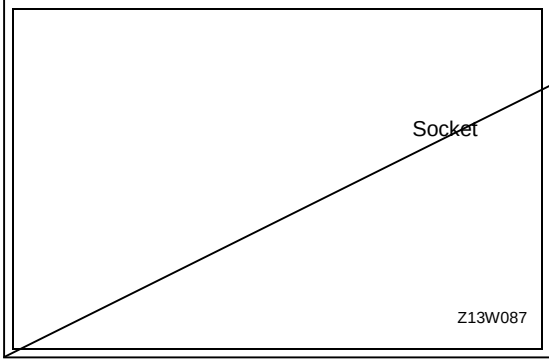

! G BEARING AND OIL SEAL REMOVAL

using a socket, remove the oil seal and bearing from the valve housing simultaneously.

<Deleted>

REASSEMBLY

37200430022

<Old>

<New>

13W0034

Gear box seal kit

<New>

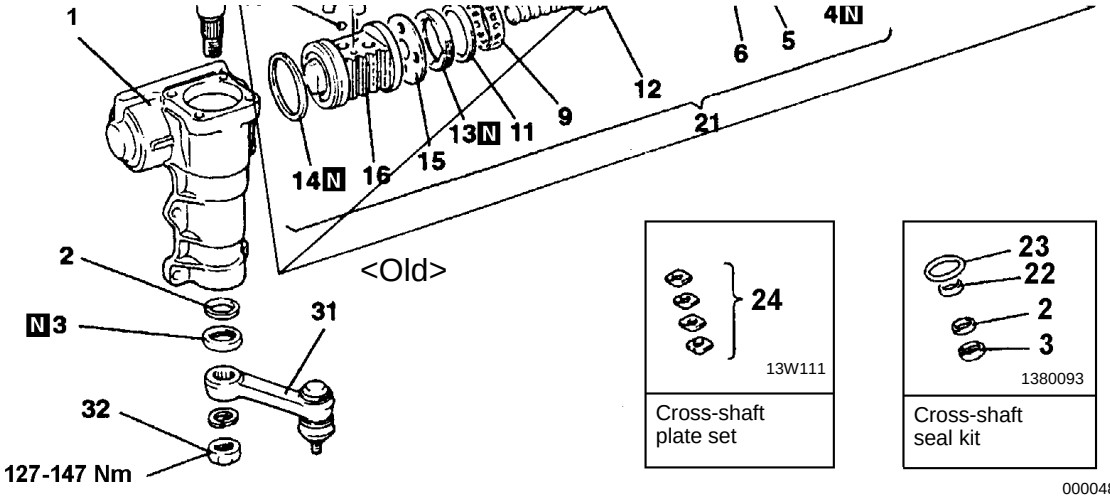

13V0108

Cross-shaft plate set

Cross-shaft seal kit

00004893

Reassembly steps

1. Gear box housing
2. Y-packing
3. Oil seal
4. Oil seal
5. Bearing
6. Bearing case
7. O-ring
8. Seal ring
9. Cage
10. Ball
11. Bearing race
12. Mainshaft
13. Lock nut
    Mainshaft axial play adjustment
14. Seal ring
15. Spacer
16. Rack piston
17. Ball
18. Circulator

<Deleted>

7-1. O-ring

<Added>

<Deleted>

A13V0108

19. Circulator holder
20. Valve housing
21. Mainshaft and valve assembly
22. Y-packing
23. O-ring
    Cross-shaft axial play adjustment
24. Adjusting plate
25. Adjusting bolt
26. Cross-shaft
27. Side cover
28. Side cover and cross-shaft assembly
29. Bolt
    Mainshaft total staring torque Adjustment
30. Adjusting bolt lock nut
31. Pitman arm
32. Jam nut

LUBRICATION AND SEALING POINTS

<Deleted>

13W707

Automatic transmission fluid DEXRON or DEXRON II

13W705

Automatic transmission fluid DEXRON or DEXRON II

<Old>

13W706

Automatic transmission fluid DEXRON or DEXRON II

<New>

<Deleted>

13W698

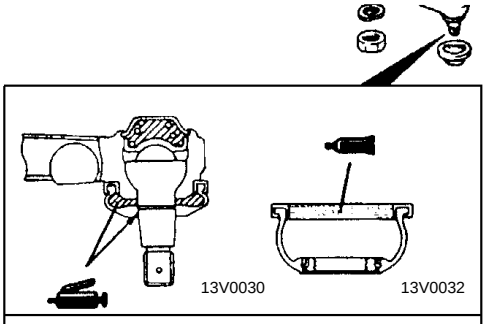

Sealant:
3M ATD Part No. 8661 or equivalent

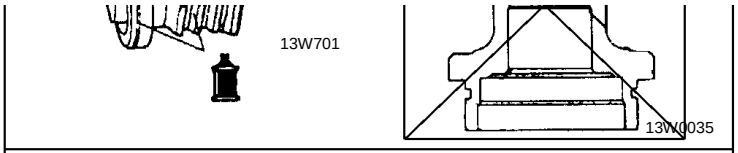

Automatic transmission fluid DEXRON or DEXRON II

00004894

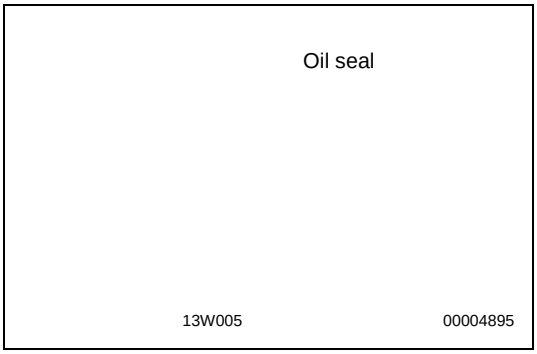

REASSEMBLY SERVICE POINTS

! !"A" OIL SEAL INSTALLATION

Apply a coating of the specified fluid to the outside of the oil seal. Using the special tools, press the oil seal into the valve housing.

Specified fluid:

Automatic transmission fluid DEXRON or DEXRON II

Z13W071

" B! OIL SEAL INSTALLATION

Apply a coating of the specified fluid to the outside of the bearing. Using the special tools, press the oil seal into the valve housing.

Specified fluid:

Automatic transmission fluid
DEXRON or DEXRON II

A13V0027

" C! BEARING INSTALLATION

Apply a coating of the specified fluid to the outside of the bearing. Using the special tools, press the bearing into the valve housing.

Specified fluid:

Automatic transmission fluid
DEXRON or DEXRON II

Seal rings

Z13W704

" D! SEAL RING INSTALLATION

Press the seal ring firmly into the valve groove.

Z13W058

" E! CAGE, BALLS, BEARING RACE AND MAINSHAFT INSTALLATION

1. Apply specified fluid to the mainshaft.

   Specified fluid:

   Automatic transmission fluid
   DEXRON or DEXRON II
2. Wrap vinyl tape around the serrated part so that the oil seal won't be damaged when the mainshaft is installed to the valve housing.
3. Mount the mainshaft to the valve housing.
4. Align the cage's hole and the channel in the mainshaft and insert two or three balls.
5. Insert the remainder of the balls into the cage's hole while pressing the ball with the bearing race.
6. When installing the mainshaft, connect it to the valve housing while pressing the bearing race so that the balls do not come out.

<Deleted>

Items		Specifications
Pressure switch activation oil pressure		
	Mpa (kg/cm^2, psi)	
OFF ON		1.5 – 2.0 (15 – 20, 21-284)
ON OFF		0.7 – 1.2 (7.2 – 12, 100-171)
Mainshaft starting torque (Manual steering)		
<Deleted>	Nm (kgcm, in.lbs.)	0.35 – 0.55 (3.5 – 5.5, 3 – 5)
~~Mainshaft axial play (Power steering)~~	~~mm (in.)~~	~~0.03 – (0.0012) or less~~
Cross-shaft axial play	mm (in.)	
Manual steering’		0.05 (0.0020)
Power steering		0.05 (0.0020)
Mainshaft total starting torque	Nm (kgcm, in.lbs.)	
Manual steering		0.65 – 0.85 (6.5 – 8.5, 5.7 – 7.3)
Power steering		0.45 – 1.25 (4.5 – 12, 5, 4 – 11)
Ball joint starting torque	Nm (kgcm, in.lbs.)	
Tie rod end		1 – 3 (10 – 30, 8.9 – 26)
Idler arm		0.5 – 2.0 (5 – 520, 4 – 17)
Idler arm turning torque	Nm (kgcm, in.lbs.)	0.3 – 2.0 (3 – 20, 3 – 17)
Spring balance reading	N (kg,lbs)	2.3 – 15.4 (0.23 – 1.54, 0.5 – 33.9)
Limit		
Steering wheel free play	mm (in.)	
Manual steering		50 (1.97)
Power steering		50 (1.97)
Steering gear backlash	mm (in.)	0.5 (0.020)
Ball joint axia play	mm (in.)	1.5 (0.059)
Backlash between ball groove of rack piston		
And balls	mm (in.)	0.05 (0.0020)
Gap between vane and rotor groove	mm (in.)	0.06 (0.0024)
Clearance between oil pump drive shaft		
And pump body	mm (in.)	0.1 (0.004)

LUBRICANTS

E37CD--

Items	Specified lubricant	Quantity
Manual steering gear oil	Hypoid gear oil API GL-4 or higher SAE 80	210 cm3 (12.81 cu.in.)
Power steering fluid L.H. drive vehicles <2800D> <Except 2800D> R.H. drive vehicels <2800D> <Except 2800D>	Automatic transmission fluid DEXRON or DEXRON II	 11.1 dm3 (1.17 U.S.qts., 0.98 lmp.qts.) 1.06 dm3 (1.12 U.S.qts., 0.93 lmp.qts.) 1.02 dm3 (1,08 U.S.qts., 0.90 lmp.qts.) 0.97 dm3 (1.02 U.S. qts., 0.85 lmp.qts.)
Power steering gear box ~~Bearing~~, O-ring and oil seal <Deleted>	Automatic transmission fluid DEXRON or DEXRON II	As required
Oil pump Flow control valve and O-ring Friction surface of rotor, vane, cam ring and pump cover	Automatic transmission fluid DEXRON or DEXRON II	As required

SEALANTS AND ADHESIVES

E37CE--

Items	Specified sealant and adhesive	Remarks
Steering column cover assembly installation hole Dash panel cover installed surface Manual steering gear box top cover packing Manual steering gear box cross-shaft adjusting and lock nut Manual steering gear box top cover bolt Manual steering gear box adjusting shim Tie-rod end dust cover installed surface	3M ATD Part No. 861 or equivalent	Semi-drying sealant
Inside of steering column lower pipe bearing Connection of steering column upper and steering column lower (Nut side)	3M Stud Locking Part No. 4170 or equivalent	Semi-drying sealant
Steering column upper bearing	3M ATD Part No. 8001 or equivalent	Semi-drying sealant

Tool	Number	Name	Use
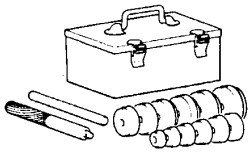	MB990925	Bearing and oil seal installer set	Installation of the oil seal and the ball bearing (Refer to GROUP 26.) MB990938, MB99028,MB990926, ~~MB991203~~
	MB991151 MB990685	Torque wrench	Measurement of the mainshaft starting torque
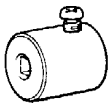	MB991006 or MB990228	Preload socket	Measurement of the mainshaft total starting torque
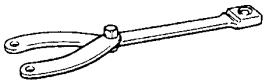	MB991367	Special spanner	Removal and installation of the lock nut
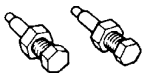	MB991394	Pin set	
	MB990326	Preload socket	Measurement of the ball joint starting torque

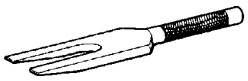

DISASSEMBLY

E37NF--

<New>

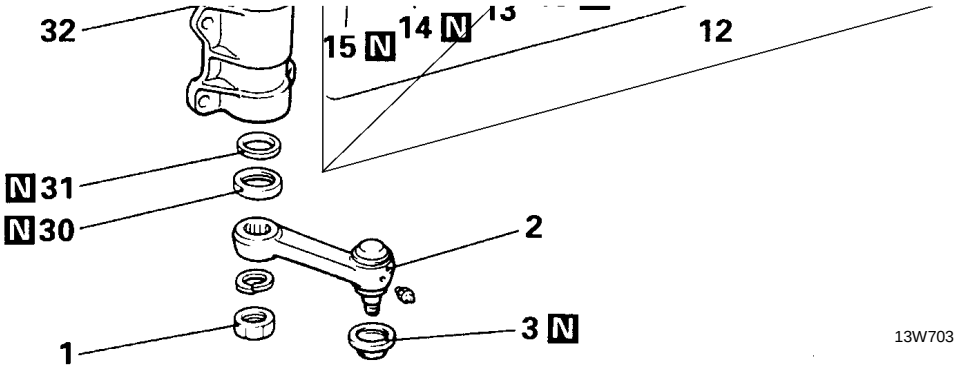

Disassembly steps

	1.	Jam nut
!"	2.	Pitman arm
	3.	Dust cover
!"	4.	Side cover and cross-shaft assembly
	5.	Adjusting bolt lock nut
	6.	Cross-shaft
	7.	Adjusting bolt
	8.	Adjusting plate
	9.	O-ring
!"	10.	Y-packing
	11.	Side cover
!"	12.	Main shaft and valve assembly
!"	~~13.~~	~~Rack piston~~
	14.	Seal ring
	15.	O-ring
	~~16.~~	~~Circulation holder~~
	17.	Circulator
	18.	Ball
!"	19.	Lock nut
!"	20.	Main shaft
!"	21.	Bearing race
!"	22.	Cage
!"	23.	Ball
	24.	Seal ring
	25.	Bearing race
	26.	O-ring
!"	27.	Bearing
!"	28.	Oil seal
	29.	Valve housing
	30.	Oil seal
	31.	Y-packing
	32.	Gear box housing

<Deleted>

<Deleted>

SERVICE POINTS OF DISASSEMBLY

E37NGAE

2. REMOVAL OF PITMAN ARM

13V018

4. REMOVAL OF SIDE COVER AND CROSS-SHAFT ASSEMBLY

   With the mainshaft and cross-shaft placed in the straight ahead position, tap the bottom of the cross-shaft with a plastic hammer to take out the cross-shaft together with the side cover.

10. REMOVAL OF Y-PACKING

    Do not remove the Y-packing at the rear of the needle bearing unless there is fluid leakage from the threads of the adjusting bolt. If there is leakage, replace the Y-pacing with a new one.

13W056

<Deleted>

13. REMOVAL OF RACK PISTON

    Remove the rack piston form the mainshaft by turning it counterclockwise.

    Caution
    Be careful not to lose the 26 balls inside the rack piston.

13W094

19. REMOVAL OF LOCK NUT

13W719

20. REMOVAL OF MAIN SHAFT/21. BEARING RACE/22. CAGE/23. BALL

    When removing the main shaft, remove it while pressing the bearing race so that the balls do not come out.

Main shaft

Bearing r(ak)iW056

13W091

<Deleted>

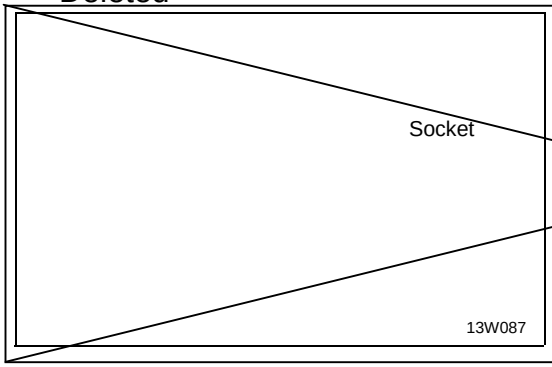

27. REMOVAL OF BEARING/28. OIL SEAL

Using a socket, remove the oil seal and the bearing from the valve housing simultaneously.

E37NHAD

INSPECTION

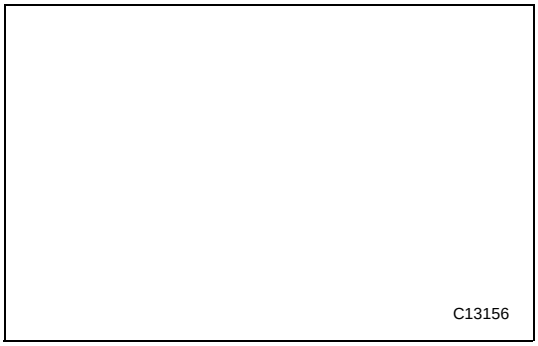

BACKLASH BETWEEN BALL GROOVE OF RACK PISTON AND BALLS

Set the rack piston to the position shown in the figure, and then measure the backlash by using a dial gauge.

Limit: 0.05 mm (0.0020 in.)

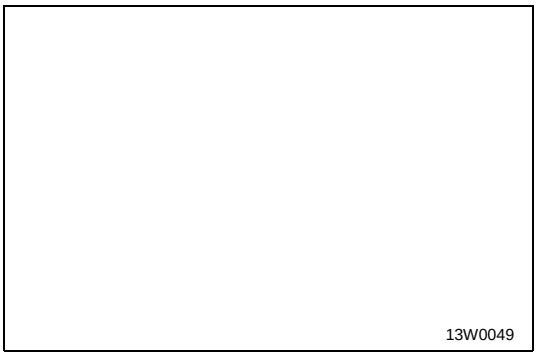

PITMAN ARM BALL JOINT STARTING TORQUE

Standard value: 1-3 Nm (10-30 kgcm, 9-26 in.lbs.)

REASSEMBLY

E37NI--

<New>

38 Nm
3.8 kgm
27 ft.lbs.

50Nm
5 kgm
36 ft.lbs.

<Old>

50Nm
5 kgm
36 ft.lbs.

3.5 Nm
0.35 kgm
2.5 ft.lbs.

<Old>

13W699

Gear box seal kit

<New>

50Nm
5 kgm
36 ft.lbs.

13W703

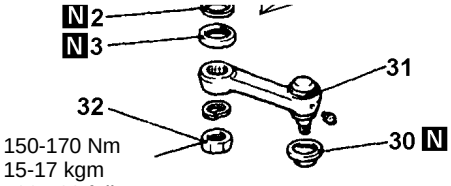

150-170 Nm
15-17 kgm
108-123 ft.lbs.

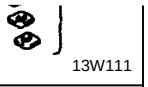

Cross-shaft plate set

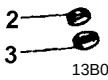

Cross-shaft seal kit

Reassembly steps

1. Gear box housing
"! 2. Y-packing
"! 3. Oil seal
"! 4. Oil seal
"! 5. Bearing
6. Bearing case
7. O-ring
"! 8. Seal ring
"! 9. Cage
"! 10. Ball
"! 11. Bearing race
"! 12. Mainshaft
"! 13. Lock nut
"! Adjustment of main shaft axial play
14. O-ring
15. Seal ring
"! 16. Rack piston
17. Ball

<Deleted>

<Deleted>

18. Circulator
19. Circulator holder
"! 20. Valve housing
21. Mainshaft and valve assembly
22. Y-packing
23. O-ring
"! 24. Adjusting plate
"! 25. Adjusting bolt
"! 26. Cross-shaft
"! 27. Adjusting bolt lock nut
28. Side cover
"! 29. Side cover and cross-shaft assembly
"! Adjustment of main shaft total staring torque
30. Dust cover
"! 31. Pitman arm
32. Jam nut

A13V0108

LUBRICATION AND SEALING POINTS

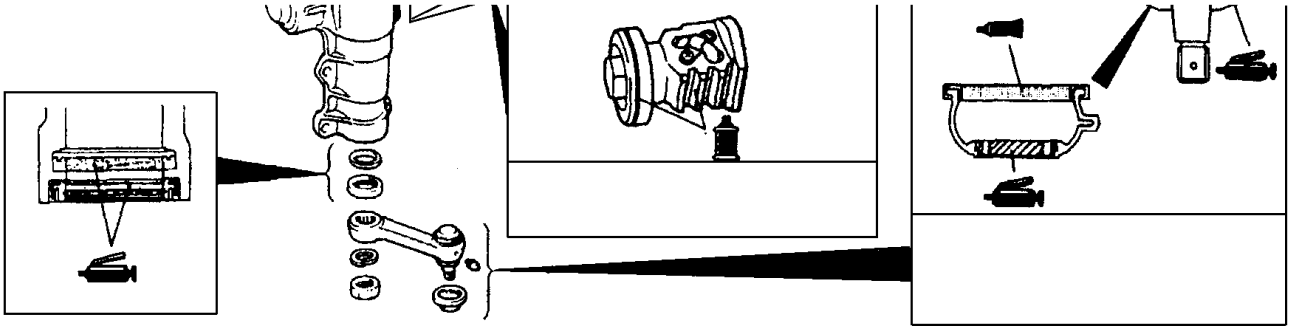

SERVICE POINTS OF REASSEMBLY

<Deleted>

13W070

5. INSTALLATION OF BEARING

Apply a coating of the specified fluid to the outside of the bearing. Using the special tools, press the oil seal into the valve housing.

Specified fluid: Automatic transmission fluid DEXRON or DEXRON II

Seal ring

13W704

8. INSTALLATION OF SEAL RING

When installing seal ring, press firmly into valve groove.

Vinyl tape

13W705

9. INSTALLATION OF CAGE/10. BALL/11. BEARING RACE/12. MAIN SHAFT

(1) Apply specified fluid to valve body.

Specified fluid: Automatic transmission fluid DEXRON or DEXRON II

(2) Wrap vinyl tape around the serrated part so that the oil seal won't be damaged when the valve body is installed tot he valve housing.

(3) Mount the valve body to the valve housing

13W058

(4) Align the cage's hole and the channel in the main shaft, and insert two or three balls.

(5) Insert the remainder of the balls into the cage's hole while pressing the ball with the bearing race.

13W089

(6) When installing the main shaft, connect it to the valve housing while pressing the bearing race so that the balls do not come out.

<Deleted>

13W719

13. INSTALLATION OF LOCK NUT

Using the special tool,tighten carefully until the lock nut contacts the bearing race.

Dial gauge

13E0077

ADJUSTMENT OF MAIN SHAFT AXIAL PLAY

(1) Adjust the play by tightening the lock nut gradually so that the mainshaft axial play will meet the range of standard value.

Standard value: 0.03 mm (0.0012 in.) or less

13W063

(2) Use a punch to crimp the circumference of the lock nut so as to secure the lock nut.
(3) Check to be sure that the mainshaft rotates smoothly.

13W700

13W093

16. INSTALLATION OF RACK PISTON

(1) Install the rack piston until it comes in contact with the edge of the main shaft.
(2) Rotate the main shaft to align the ball raceway with the 19-ball insertion hole.

NOTE
The balls must be inserted so that there is no clearance between the balls.

(3) Set the remaining seven balls in the circulator, and install the circulator to the rack piston.

<Deleted>

~~20. INSTALLATION OF VALVE HOUSING~~
~~(1) Apply specified automatic transmission fluid to the seal ring of the rack piston.~~
~~Specified fluid: Automatic transmission fluid DEXRON or DEXRON II~~
~~(2) Insert the valve housing.~~
~~(3) Rotate the main shaft until the rack piston moves to the neutral position (center).~~

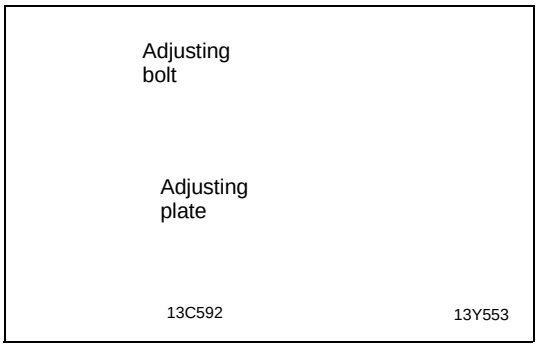

24. INSTALLATION OF ADJUSTING PLATE/25. ADJUSTING BOLT
(1) Install the adjusting plate so that the beveled part is facing downward.
(2) Using a thickness gauge, measure the clearance between the adjusting bolt and cross-shaft.
Standard value: 0 - 0.05 mm (0 – 0.002 in.)
(3) If the clearance is exceeded the standard value, replace with a suitable adjusting plate.

26. INSTALLATION OF CROSS-SHAFT/27. ADJUSTING BOLT LOCK NUT
Install the cross-shaft to the side cover, and then temporarily tighten the adjusting bolt lock nut.

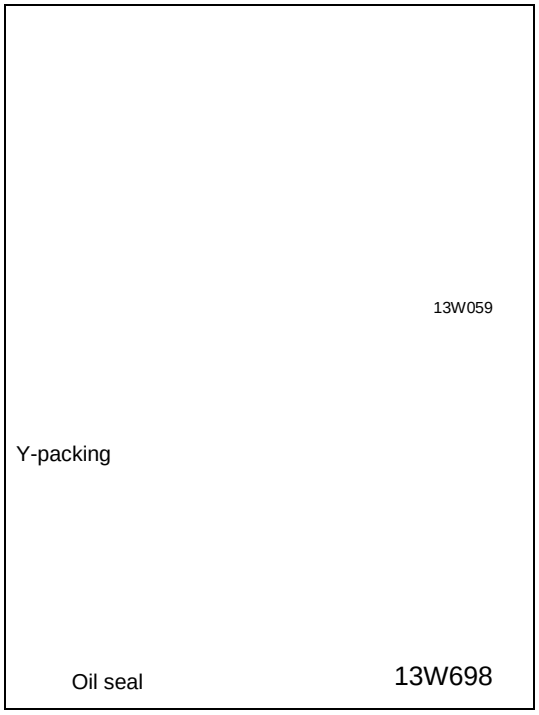

29. INSTALLATION OF SIDE COVER AND CROSS-SHAFT ASSEMBLY
Install the side cover assembly (with the corss-shaft) to the gear box.

NOTE
Apply specified automatic transmission fluid to the teeth and shaft areas of the rack piston, and apply multipurpose grease to the oil seal lip.

Specified fluid: Automatic transmission fluid DEXRON or DEXRON II

Caution
Do not rotate the side cover during installation. Take care not to damage the cross-shaft oil seal.

SERVICE BULLETIN

QUALITY INFORMATION ANALYSIS
OVERSEAS SERVICE DEPT. MITSUBISHI MOTORS CORPORATION

MOTORS

SERVICE BULLETIN	**No.:** MSB-00E37-501		
	Date: 2000-12-30	**<Model>**	**<M/Y>**

Subject: ADDITION OF STEERING ANGLE

STEERING ANGLE CHECK

E37FDAH

1. Place the front wheel on a turning radius gauge and measure the steering angle
   Standard value: **Inner wheel 32° 40'^{0}**
   Outer wheel 29° 45'

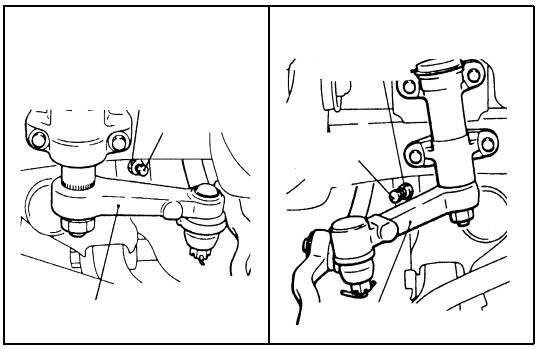

2. If the steering angle is outside the standard value, after checking the toe-in, (Refer to GROUP 33-Service Adjustment Procedures), adjust the steering angle with the stopper bolt.

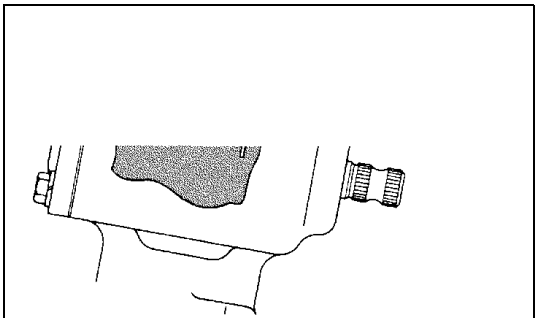

STEERING GEAR OIL LEVEL CHECK (MANUAL STEERING)

E37FEAAa

Remove the breather plug and check the oil level in the steering gear box by using a special gauge or a thin screwdriver.

Standard value: 25 mm (0.98 in.)

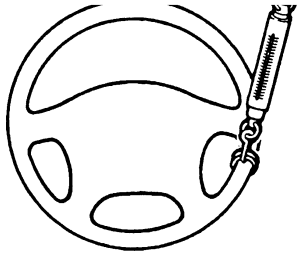

ON-VEHICLE SERVICE

37100090043

STEERING WHEEL FREE PLAY CHECK

1. With engine running (hydraulic operation), set front wheels straight ahead.
2. Measure the play on steering wheel circumference before wheels start to move when slightly moving steering wheel in both directions.

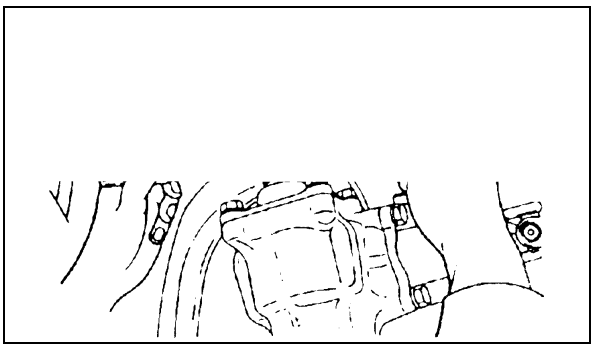

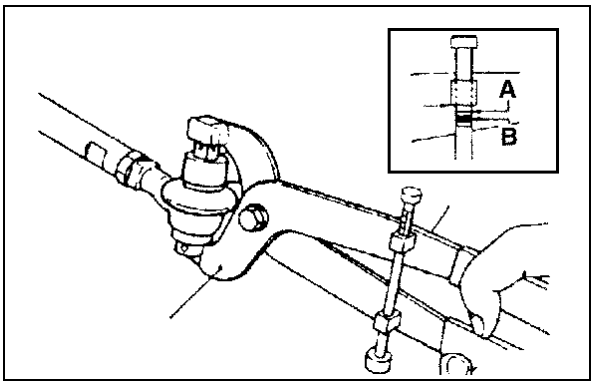

5. 4WD VEHICLES

   If the measured value exceeds the limit, screw in the steering gear box adjusting bolt until steering wheel free play is within the range of standard value.

   Caution

   1. **Be sure to make the adjustment with the steering wheel in the straight-ahead position.**
   2. **If the adjusting bolt is overtightened, more steering effort will be required, and return of the wheel will be adversely affected.**

MEASURING BALL JOINT AXIAL PLAY

E37FCAA

1. Hold the ball joint by using the special tool.
2. Set the scale of special tool to the upper limit (A), compress the ball stud, and measure the axial play. The measured displacement should be between the upper limit (A) and the centre graduation (B).

   Limit: 1.5 mm (0.06 in.)
3. If the measured displacement exceeds the centre graduation (B), replace the ball joint.

CHECKING STEERING ANGLE

E37FDAA

1.

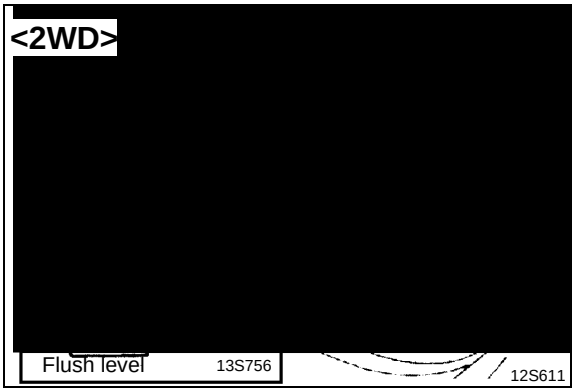

<2WD>
Caution
After adjusting toe-in and wheel steering angle, if stop bolt does not touch the lower arm when turning steering wheel fully, decrease wheel steering angle to touch on stop bolt in advance.

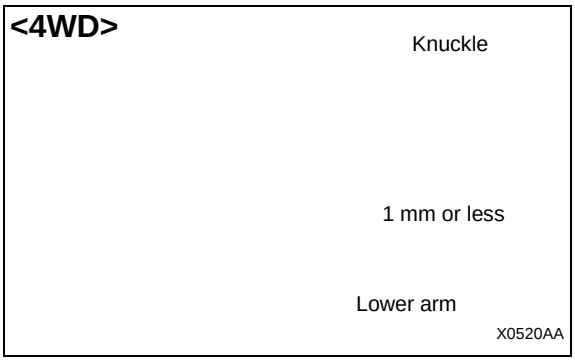

<4WD>
Caution
When the steering wheel is turned to lock, check that the clearance between the knuckle and the stopper is 1 mm or more.

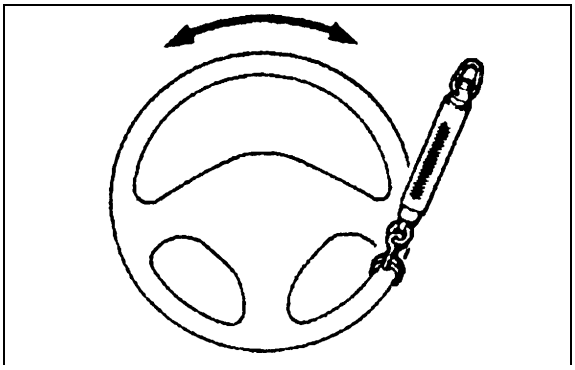

ON-VEHICLE SERVICE

37100090036

STEERING WHEEL FREE PLAY CHECK

<Manual steering>

1. Set the front wheels straight ahead.
2. Measure the play on the steering wheel circumference before wheels move when slightly moving the steering wheel in both directions.

   Limit: 50 mm
3. When the play exceeds the limit, check the play in the steering shaft connection and steering linkage. Correct or replace.
4. When (3) check provides good results, check the following to adjust: